CIVIL IMPROVEMENT PLANS FOR CITY PROJECT 18-35

CORP YARD TRANSIT PARKING EXTENSION

TURLOCK, CALIFORNIA

LEGEND

	EXISTING	PROPOSED
BOUNDARY LINE		
CENTERLINE		
RIGHT-OF-WAY		
PARCEL LINE		
MONUMENT	N/A	
SAWCUT	N/A	
CURB, GUTTER AND SIDEWALK		
EDGE OF PAVEMENT		
CONCRETE VALLEY GUTTER	N/A	
TRENCH DRAIN	N/A	
STORM DRAIN (MAIN)	SD Ex12"SD SD	12"SD
FORCE MAIN	SD 12"FM SD	12"FM
DRAINAGE SWALE		
STORM DRAIN MAINTENANCE HOLE	SD	SD
CURB INLET		
DRAIN INLET		
DRAIN INLET ON MAINTENANCE HOLE		
STORM DRAINAGE FILTER	N/A	
WATER (MAIN)	W Ex8"W	8"W
WATER (SERVICE)	W Ex8"W W	8"W
WATER VALVE	WV	WV
WATER BLOW OFF VALVE		
BACK FLOW PREVENTER	BFP	BFP
DOUBLE DETECTOR CHECK VALVE	DDCV	DDCV
POST INDICATOR VALVE (SINGLE)	PIV	PIV
FIRE DEPARTMENT CONNECTION	FDC	FDC
FIRE HYDRANT		
FIRE SPRINKLER RISER	N/A	FSR
WATER METER	WM	WM
SERVICE STUB	N/A	
CLEANOUT		
SEWER MAINTENANCE HOLE	S	S
GREASE TRAP	N/A	G
SEWER (MAIN)	SS Ex12"SS	12"SS
JOINT TRENCH (APPROX LOCATION)	JT	N/A
TRANSFORMER (APPROX LOCATION)	N/A	
OVER HEAD ELECTRICAL	OHE	N/A
SERVICE POLE		N/A
JOINT POLE		N/A
JOINT POLE WITH LIGHT	LP	N/A
POWER POLE	PP	N/A
TELEPHONE POLE	TP	N/A
GUY		N/A
ELECTRICAL MANHOLE		N/A
ELECTROLIER		100W 150W 200W
UTILITY BOX		
GAS LINE	G	N/A
GAS VALVE	GV	N/A
PAD ELEVATION	N/A	N/A
FINISH FLOOR ELEVATION (PROPOSED)	N/A	FF=100.00
BUILDING PAD	N/A	PAD=98.2
TOP OF CURB ELEVATION	(68.34 TC)	68.34 TC
ORIGINAL GROUND	106.82	N/A
DIRECTION OF FLOW	.003	.003
CONTOURS	32	32
WALL (SEE LABEL FOR TYPE)		
FENCE (CHAINLINK OR VINYL)		
FENCE (WIRE OR HOGWIRE)		
FENCE (WOOD OR WROUGHT IRON)		
FENCE (SPLIT RAIL)		
TREE OR SHRUB		N/A
TREE STUMP		N/A
IRRIGATION LINE	I Ex48"IRR	I 48"IRR
IRRIGATION VALVE	IV	N/A
IRRIGATION PRESSURE MANHOLE/VENT		
SIGN		
PERCOLATION TEST LOCATION	N/A	P-X
R-VALUE SAMPLE LOCATION	N/A	RV-X
KEYNOTE SYMBOL	X	X
DETAIL BUBBLE	N/A	X OR DETAIL NO. C04 SHEET NO.

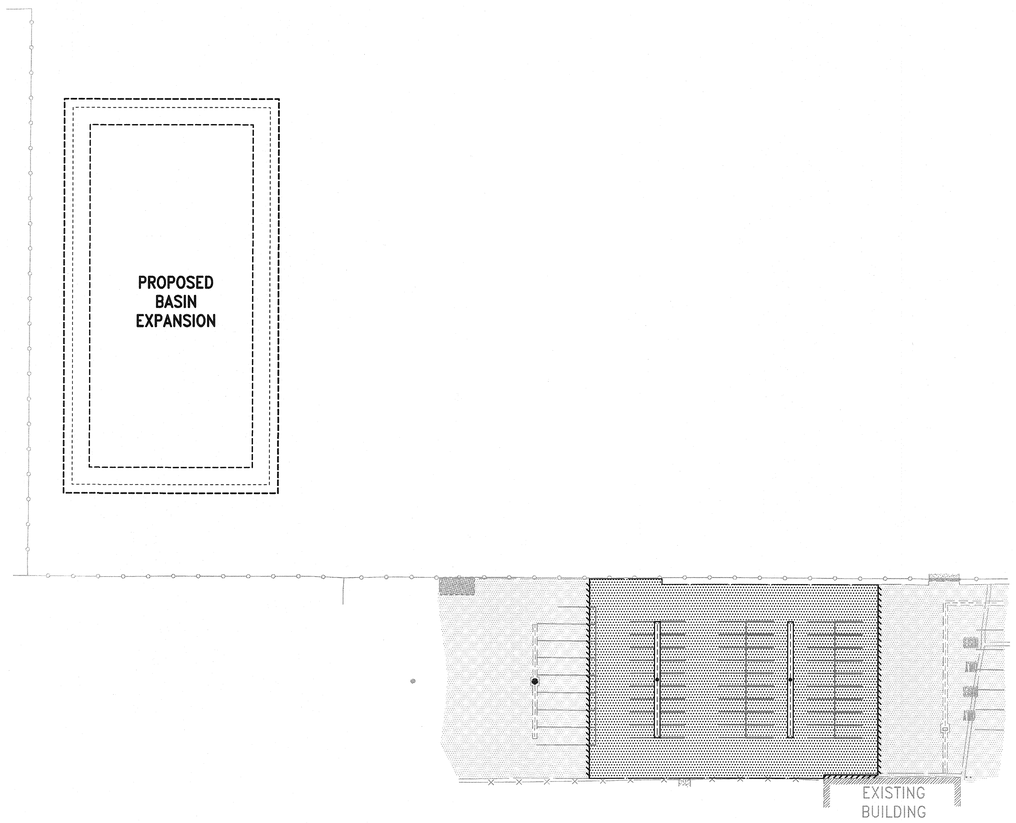

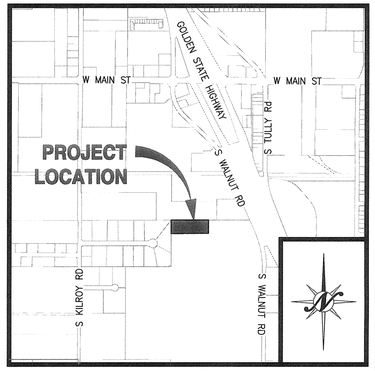

VICINITY MAP

NTS

50 25 0 50

1" = 50'

ABBREVIATIONS

±	PLUS OR MINUS (NOT EXACT)	DIP	DUCTILE IRON PIPE	LP	LOW POINT	RV	RESISTANCE VALUE
@	AT	(DOM)	DOMESTIC	JT	JOINT TRENCH	RP	REDUCED PRESSURE
AB	AGGREGATE BASE	DR	DRIVE	MAX	MAXIMUM	BP	BACKFLOW PREVENTER
AC	ASPHALT CONCRETE	DW	DRIVEWAY	MH	MAINTENANCE HOLE	S	SLOPE OR SOUTH
ACC	ACCESSIBLE	E	EAST	MIN	MINIMUM	SC	STANISLAUS COUNTY
ADTT	AVERAGE DAILY TRUCK TRAFFIC	EC	END OF CURVE	N	NORTH	SD	STORM DRAIN
AG	ATRIUM GRATE	ELC	ELECTROLIER	NDS	NDS INC. (MANUFACTURER)	SG	SUB-GRADE
ALT	ALTERNATE	ELEV	ELEVATION	NIC	NOT INCLUDED	SHT	SHEET
APN	ASSESSORS PARCEL NUMBER	EP	EDGE OF PAVEMENT	NSE	NORTHSTAR ENGINEERING	SIM	SIMILAR
ASR	AUTOMATIC SPRINKLER RISER	ER	END OF RETURN	NTS	NOT TO SCALE	SNS	STREET NAME SIGN
AVE	AVENUE	ESMT OR EASE	EASEMENT	OC	ON CENTER	ST	STREET
BC	BEGIN CURVE	EX OR EXIST	EXISTING	OF	OFFSET	STA	STATION
BDRY	BOUNDARY	FDC	FIRE DEPARTMENT CONNECTION	OG	ORIGINAL GROUND / GRADE	STD	STANDARD
BFP	BACK FLOW PREVENTOR	FES	FLARED END SECTION	OHE	OVER HEAD ELECTRIC	S/W OR SW	SIDEWALK
BK	BOOK	FF	FINISH FLOOR	P OR PAV	PAVEMENT	SS	SANITARY SEWER
BM	BENCH MARK	FG	FINISH GRADE	PCC	POINT OF COMPOUND CURVE OR PORTLAND CEMENT CONCRETE	TC	TOP OF CURB
BW	BACK OF WALK	FH	FIRE HYDRANT			TD	TRENCH DRAIN
BSL	BUILDING SETBACK LINE	FL	FLOW LINE	PG	PAGE	TDC	TOP OF DRIVE OVER CURB
BVC	BEGIN VERTICAL CURVE	FM	FORCE MAIN	PG&E	PACIFIC GAS AND ELECTRIC	TEMP	TEMPORARY
C&G OR C.G.	CURB AND GUTTER	FS	FIRE SERVICE	PIV	PRESSURE INDICATOR VALVE	TG	TOP OF GRATE
CB	CATCH BASIN	FSR	FIRE SPRINKLER RISER	PL	PROPERTY LINE	THRU	THROUGH
CDS	CONTINUOUS DEFLECTION SEPARATORS	GB	GRADE BREAK	PM	PARCEL MAP	TI	TRAFFIC INDEX
		GR	GRATE, GRADE, OR GROUND	POC	POINT OF CONNECTION	TW	TOP OF WALL
CIP	CAST IRON PIPE	GS	GROUND SHOT ELEVATION	PP	POWER POLE	TPE	TREE PLANTING EASEMENT
℄ OR CL	CENTER LINE	GS@W	GROUND SHOT AT WALL	PROF	PROFILE	TVC	TOP OF VERTICAL CURB
CMP	CORRUGATED METAL PIPE	GV	GATE VALVE	PT	POINT	TYP	TYPICAL
CO	CLEAN OUT	HORIZ	HORIZONTAL	PUE	PUBLIC UTILITY EASEMENT	UON	UNLESS OTHERWISE NOTED
COMP.	COMPACTION	HP	HIGH POINT	PVC	POLYVINYL CHLORIDE PIPE	VERT	VERTICAL
CONC OR CC	CONCRETE	HPS	HIGH PRESSURE SODIUM	RW	RECLAIMED WATER	VCP	VITRIFIED CLAY PIPE
COT OR C.O.T.	CITY OF TURLOCK	HT	HEIGHT	R/W	RIGHT-OF-WAY	W	WATER OR WEST
CR	CURB RETURN	HWY	HIGHWAY	R	RADIUS	WM	WATER METER
CT.	COURT	ID	INSIDE DIAMETER	RC	RELATIVE COMPACTION	WS	WATER SERVICE
CV	CHECK VALVE	INV	INVERT	RCP	REINFORCED CONCRETE PIPE	WY	WAY
DDCV	DOUBLE DETECTOR CHECK VALVE	IRR	IRRIGATION	R.D.	RELATIVE DENSITY	W/	WITH
DI	DRAIN INLET	LF	LINEAL FEET OR LINEAR FEET	RD	ROAD	WWF	WELDED WIRE FABRIC
DIA	DIAMETER	LN	LANE	RET	RETURN		

PREPARED FOR

CLIENT:
CITY OF TURLOCK
156 S BROADWAY ST #150
TURLOCK, CA 95380
P: (209) 668-5520

CONTACT:
NATHAN BRAY, P.E.

PROJECT LOCATION

SITE ADDRESS
TURLOCK TRANSIT CORP YARD
701 S WALNUT RD
TURLOCK, CA 95380

BENCHMARK

ELEVATION = **96.112'**

DESCRIPTION: BRASS PLUG WEST SIDE OF WALNUT AT SOUTH AVENUE NEAR WASTE TREATMENT PLANT

REGISTERED PROFESSIONAL ENGINEER NATHAN B. BRAY C 76642 CIVIL STATE OF CALIFORNIA

SHEET INDEX

GENERAL INFORMATION

1. C1.1 COVER SHEET
2. C1.2 GENERAL NOTES AND SPECIFICATIONS
3. C1.3 DETAILS AND CROSS SECTIONS

SITE PLANS

4. C2.1 TOPOGRAPHIC AND DEMOLITION PLAN
5. C2.2 TOPOGRAPHIC AND DEMOLITION PLAN
6. C3.1 DIMENSION AND PAVING PLAN
7. C4.1 GRADING AND DRAINAGE PLAN
8. C5.1 COMPOSITE UTILITY PLAN
9. C5.2 COMPOSITE UTILITY PLAN
10. C6.1 EROSION CONTROL PLAN
11. C6.2 EROSION CONTROL NOTES AND DETAILS

APPROVALS

APPROVED BY THE CITY OF TURLOCK

NATHAN BRAY, P.E. — DATE 2/13/19
INTERIM DEVELOPMENT
SERVICES DIRECTOR/CITY ENGINEER

COPYRIGHT © 2019 NORTHSTAR ENGINEERING GROUP, INC

CALL BEFORE YOU DIG 800-227-2600

REGISTERED PROFESSIONAL ENGINEER CHRISTIAN GOALCIA No. C85387 EXP. 9/30-20 02/06/19 CIVIL STATE OF CALIFORNIA

NO.	DESCRIPTIONS	DATE	APPROVED

REVISIONS

COVER SHEET

CIVIL IMPROVEMENT PLANS FOR CITY PROJECT 18-35
CORP YARD TRANSIT PARKING EXTENSION
TURLOCK, CALIFORNIA

NorthStar Engineering Group, Inc.
• CIVIL ENGINEERING • SURVEYING • PLANNING •
620 12th Street Modesto, CA 95354
(209) 524-3525 Phone (209) 524-3528 Fax

JOB #:	18-2161
DATE:	02/06/2019
SCALE:	AS SHOWN
DRAWN:	JC
DESIGN:	CW
CHK'D:	JPE

SHEET NUMBER

C1.1

PLOTTED: 02/06/2019 15:07 PLOTTED BY: Cargajada
DWGNAME: F:\18-2161 Turlock Corp Yard Transit Parking Extension\Civil\Eng Plans\C1.1 CVR.dwg

CONTACTS

A. REGULATORY AGENCY:	CITY OF TURLOCK 156 S BROADWAY ST #150 TURLOCK, CA 95380 T: (209) 668-5520
B. OWNER/DEVELOPER:	CITY OF TURLOCK 156 S BROADWAY ST #150 TURLOCK, CA 95830 T: (209) 668-5520 CONTACT: NATHAN BRAY, P.E
C. PROJECT LOCATION:	701 S WALNUT RD TURLOCK, CA 95380
D. ENGINEER:	NORTHSTAR ENGINEERING GROUP, INC. 620 12TH STREET MODESTO, CA. 95354 T: (209) 524-3525 CONTACT: JOHN ELLIS

GENERAL NOTES

1. CONTRACTOR SHALL BE AWARE THAT THE FOLLOWING NOTES LISTED BELOW ARE NORTHSTAR ENGINEERING GROUP'S TYPICAL GENERAL NOTES AND SOME NOTES MAY NOT BE APPLICABLE TO THIS PLAN SET.
2. ALL IMPROVEMENTS SHALL BE CONSTRUCTED IN STRICT ACCORDANCE WITH THE FOLLOWING: CITY OF TURLOCK STANDARD SPECIFICATIONS AND THE LATEST EDITION OF THE CALIFORNIA BUILDING CODE. WHERE THERE IS A CONFLICT BETWEEN THE PLANS AND THE CITY AND/OR CALIFORNIA BUILDING CODE STANDARDS, THE CITY AND/OR CALIFORNIA BUILDING CODE STANDARDS SHALL PREVAIL. ALL WORK SHALL BE SUBJECT TO THE INSPECTION OF THE CITY OF TURLOCK.
3. PRIOR TO ANY WORK BEING PERFORMED, THE CONTRACTOR SHALL CONTACT THE APPROPRIATE REGULATORY AGENCIES FOR A PRE-CONSTRUCTION CONFERENCE. CONTRACTOR SHALL ALSO NOTIFY THE PROJECT CONTACTS LISTED ON THIS SHEET FORTY-EIGHT (48) HOURS IN ADVANCE OF SAID MEETING.
4. IT IS INTENDED THAT THESE PLANS AND SPECIFICATIONS REQUIRE ALL LABOR AND MATERIALS NECESSARY AND PROPER FOR THE WORK CONTEMPLATED AND THAT THE WORK BE COMPLETED IN ACCORDANCE WITH THEIR TRUE INTENT AND PURPOSE. THE CONTRACTOR SHALL NOTIFY NORTHSTAR ENGINEERING GROUP, INC. ("ENGINEER") IMMEDIATELY REGARDING ANY DISCREPANCIES AND AMBIGUITIES WHICH MAY EXIST IN THE PLANS AND SPECIFICATIONS. IF THE PLANS OR SPECIFICATIONS DESCRIBE PORTIONS OF THE WORK IN GENERAL TERMS BUT NOT IN COMPLETE DETAIL, IT IS UNDERSTOOD THAT ONLY THE BEST GENERAL PRACTICE IS TO PREVAIL AND THAT ONLY MATERIALS AND WORKMANSHIP OF THE FIRST QUALITY ARE TO BE USED.
5. CONSTRUCTION STAKING FOR GRADING, CURB, GUTTER, SIDEWALK, SANITARY SEWER, STORM DRAIN, AND WATER SHALL BE DONE UNDER THE DIRECTION OF THE ENGINEER. THE CONTRACTOR SHALL NOTIFY THE ENGINEER SEVENTY-TWO (72) HOURS IN ADVANCE OF THIS NEED FOR STAKING. ANY STAKING REQUESTED BY THE CONTRACTOR OR HIS SUBCONTRACTORS THAT IS ABOVE AND BEYOND NORMAL STANDARD STAKING NEEDS AS OUTLINED IN THE CONTRACT, WILL BE SUBJECT TO AN EXTRA BACK CHARGE TO THE CONTRACTOR.
6. THE CONTRACTOR SHALL EXERCISE DUE CAUTION AND SHALL CAREFULLY PRESERVE BENCH MARKS, REFERENCE POINTS AND ALL SURVEY STAKES, AND SHALL BEAR ALL EXPENSE FOR REPLACEMENT AND/OR ERRORS CAUSED BY THEIR UNNECESSARY LOSS OR DISTURBANCE.
7. CONTRACTOR AGREES THAT HE SHALL ASSUME SOLE AND COMPLETE RESPONSIBILITY FOR JOB SITE CONDITIONS DURING THE COURSE OF CONSTRUCTION OF THIS PROJECT, INCLUDING SAFETY OF ALL PERSONS AND PROPERTY; THAT THIS REQUIREMENT SHALL APPLY CONTINUOUSLY AND NOT BE LIMITED TO NORMAL WORKING HOURS; AND THAT THE CONTRACTOR SHALL DEFEND, INDEMNIFY AND HOLD THE OWNER, ENGINEER AND THE CITY HARMLESS FROM ANY AND ALL LIABILITY, REAL OR ALLEGED, IN CONNECTION WITH THE PERFORMANCE OF WORK ON THIS PROJECT, EXCEPTING FOR LIABILITY ARISING FROM THE SOLE NEGLIGENCE OF THE OWNER OR THE ENGINEER.
8. THE CONTRACTOR SHALL BE HELD RESPONSIBLE FOR ANY FIELD CHANGES MADE WITHOUT WRITTEN AUTHORIZATION FROM THE CITY ENGINEER.
9. THE CONTRACTOR SHALL PROVIDE ALL LIGHTS, SIGNS, BARRICADES, FLAGMEN, OR OTHER DEVICES NECESSARY FOR PUBLIC SAFETY IN ACCORDANCE WITH THE CURRENT ISSUE OF "CALIFORNIA MANUAL ON UNIFORM TRAFFIC CONTROL DEVICES" PUBLISHED BY THE STATE OF CALIFORNIA BUSINESS AND TRANSPORTATION AGENCY.
10. THE OFFICE OF THE CITY OF TURLOCK PUBLIC WORKS SHALL BE NOTIFIED AT LEAST 48 HOURS IN ADVANCE OF ANY WORK.
11. CABLE TV, ELECTRICAL, GAS, AND TELEPHONE UNDERGROUND WORK SHALL BE COMPLETED PRIOR TO CONSTRUCTION OF THE CURB, GUTTER, SIDEWALK AND PAVING.
12. THE CONTRACTOR SHALL OBTAIN AN ENCROACHMENT PERMIT FROM THE CITY OF TURLOCK, DEPARTMENT OF PUBLIC WORKS OR ANY OTHER APPLICABLE AGENCY PRIOR TO COMMENCEMENT OF WORK WITHIN EXISTING CITY RIGHT-OF-WAY. THE CONTRACTOR SHALL BE RESPONSIBLE FOR ALL PERMITS AND LICENSES REQUIRED FOR THE CONSTRUCTION AND COMPLETION OF THE PROJECT.
13. THE CITY OF TURLOCK OR ASSOCIATED UTILITY COMPANY AND RESIDENCES TO BE AFFECTED SHALL BE NOTIFIED IMMEDIATELY UPON ANY UTILITY SERVICE DISRUPTION OTHER THAN SPECIFIED ON THESE IMPROVEMENT PLANS AND A TWENTY-FOUR (24) HOUR NOTICE SHALL BE GIVEN FOR ANY PLANNED DISRUPTION.
14. STREET SIGNS, TRAFFIC CONTROL SIGNS, AND PAVEMENT MARKINGS SHALL BE PROVIDED AND INSTALLED BY THE CONTRACTOR AT LOCATIONS ESTABLISHED BY THE ENGINEER.
15. THE CONTRACTOR SHALL BE RESPONSIBLE FOR PROTECTING EXISTING IMPROVEMENTS FROM DAMAGE. COST OF REPLACING DAMAGED EXISTING IMPROVEMENTS SHALL BE INCLUDED IN THE UNIT PRICE BID FOR ITEMS REQUIRING REMOVAL AND REPLACEMENT.
16. CONTRACTOR IS RESPONSIBLE FOR COORDINATION OF THE REMOVAL OR RELOCATION OF ALL EXISTING UTILITIES WITH RESPECTIVE UTILITY COMPANIES.
17. ASPHALT CONCRETE SHALL BE PLACED ONLY WHEN THE ATMOSPHERIC TEMPERATURE IS ABOVE 50°F AND RISING.
18. DRAWING NUMBERS SHOWN ON THE PLANS REFER TO DRAWINGS CONTAINED IN THE CITY OF TURLOCK STANDARD SPECIFICATIONS (I.E. DWG. 30).
19. ALL TRENCHES IN PAVED AREAS SHALL BE PAVED WITH TEMPORARY PAVING, OR COVERED WITH A STEEL PLATE OF APPROPRIATE SIZE AND STRENGTH, THE SAME DAY THE PAVEMENT CUT IS MADE.
20. WHENEVER PAVEMENT IS BROKEN OR CUT IN THE INSTALLATION OF THE WORK COVERED BY THESE SPECIFICATIONS AND PLANS, THE PAVEMENT SHALL BE REPLACED, AFTER PROPER BACK FILLING, WITH PAVEMENT MATERIALS EQUAL TO OR BETTER THAN THE MATERIALS USED IN THE ORIGINAL PAVING. THE FINISHED PAVEMENT SHALL BE SUBJECT TO THE APPROVAL OF THE CITY ENGINEER.
21. PAYMENT FOR PAVEMENT WILL BE MADE ONLY FOR AREAS SHOWN ON THE PLANS. REPLACEMENT OF PAVEMENT WHICH IS BROKEN OR CUT DURING THE INSTALLATION OF THE WORK COVERED BY THESE SPECIFICATIONS AND PLANS, AND WHICH LIES OUTSIDE OF SAID AREAS, SHALL BE INDICATED IN THE CONTRACTOR'S UNIT PRICE FOR PAVEMENT, AND NO ADDITIONAL PAYMENT SHALL BE MADE FOR SUCH WORK.
22. CONTRACTOR SHALL PROVIDE THE CITY WITH A CERTIFICATE SIGNED BY A REGISTERED CIVIL ENGINEER OR LAND SURVEYOR STATING THAT ALL BUILDING PAD ELEVATIONS ARE IN ACCORDANCE WITH THE APPROVED GRADING PLAN.
23. THE CONTRACTOR SHALL MAINTAIN A NEATLY MARKED SET OF FULL-SIZE AS-BUILT RECORD DRAWINGS SHOWING THE FINAL LOCATION AND LAYOUT OF ALL MECHANICAL, ELECTRICAL AND INSTRUMENTATION EQUIPMENT, PIPING AND CONDUITS, STRUCTURES AND OTHER FACILITIES. AS-BUILT RECORD DRAWINGS SHALL REFLECT CHANGE ORDERS, ACCOMMODATIONS, AND ADJUSTMENTS TO ALL IMPROVEMENTS CONSTRUCTED. WHERE NECESSARY, SUPPLEMENTAL DRAWINGS SHALL BE PREPARED AND SUBMITTED BY THE CONTRACTOR TO THE DEVELOPER AND APPROVAL AGENCY.
24. PRIOR TO ACCEPTANCE OF THE PROJECT, THE CONTRACTOR SHALL DELIVER TO THE ENGINEER, ONE SET OF NEATLY MARKED AS-BUILT RECORD DRAWINGS SHOWING THE INFORMATION REQUIRED ABOVE. AS-BUILT RECORD DRAWINGS SHALL BE REVIEWED AND THE COMPLETE AS-BUILT RECORD DRAWING SET SHALL BE CURRENT WITH ALL CHANGES AND DEVIATIONS REDLINED AS A PRECONDITION TO THE FINAL PROGRESS PAYMENT APPROVAL AND/OR FINAL ACCEPTANCE.

GENERAL NOTES (CONT)

25. PRIOR TO COMMENCING ANY WORK, IT SHALL BE THE CONTRACTOR'S RESPONSIBILITY TO HAVE EACH UTILITY COMPANY LOCATED, IN THE FIELD, THEIR MAIN AND SERVICE LINES. THE CONTRACTOR SHALL NOTIFY MEMBERS OF THE UNDERGROUND SERVICE ALERT (U.S.A.) FORTY-EIGHT (48) HOURS IN ADVANCE OF PERFORMING ANY EXCAVATION WORK BY CALLING THE TOLL-FREE NUMBER (800) 227-2600. THE CONTRACTOR SHALL RECORD THE U.S.A. ORDER NUMBER. IT SHALL BE THE CONTRACTOR'S SOLE RESPONSIBILITY TO PROTECT ALL EXISTING UTILITIES SO THAT NO DAMAGE RESULTS TO THEM DURING THE PERFORMANCE OF THIS CONTRACT. ANY REPAIRS NECESSARY TO DAMAGED UTILITIES SHALL BE PAID FOR BY THE CONTRACTOR. THE CONTRACTOR SHALL BE REQUIRED TO COOPERATE WITH OTHER CONTRACTORS AND UTILITY COMPANIES INSTALLING NEW STRUCTURES, UTILITIES AND SERVICE TO THE DEVELOPMENT.
26. EXCAVATIONS OF 5 FEET OR MORE IN DEPTH WILL REQUIRE AN EXCAVATION PERMIT FROM THE STATE OF CALIFORNIA DEPARTMENT OF INDUSTRIAL SAFETY. FOR TRENCHES 5 FEET OR MORE IN DEPTH, THE CONTRACTOR SHALL COMPLY WITH SECTION 5-1.02A OF THE CALTRANS STANDARDS, CHAPTER 9 OF THE STATE OF CALIFORNIA LABOR CODE, AND ANY LOCAL CODES OR ORDINANCES.
27. WE CALL YOUR ATTENTION TO TITLE 8 CALIFORNIA ADMINISTRATION CODE SECTION 1540 (A) (1) OF THE CONSTRUCTION SAFETY ORDERS ISSUED BY THE OCCUPATIONAL SAFETY AND HEALTH STANDARDS BOARD PURSUANT TO THE CALIFORNIA OCCUPATIONS SAFETY AND HEALTH ACT OF 1973 AS AMENDED WHICH STATES: (1) PRIOR TO OPENING AN EXCAVATION EFFORT SHALL BE MADE TO DETERMINE WHETHER UNDERGROUND INSTALLATIONS; I.E. SEWER, WATER, FUEL, ELECTRICAL LINES, ETC., WILL BE ENCOUNTERED AND IF SO, WHERE SUCH UNDERGROUND INSTALLATIONS ARE LOCATED. WHEN THE EXCAVATION APPROACHES THE APPROXIMATE LOCATION OF SUCH INSTALLATION, THE EXACT LOCATION SHALL BE DETERMINED BY CAREFUL PROBING OR HAND DIGGING; AND, WHEN IT IS UNCOVERED, ADEQUATE PROTECTION SHALL BE PROVIDED FOR THE EXISTING INSTALLATION. ALL KNOWN OWNERS OF UNDERGROUND FACILITIES IN THE AREA CONCERNED SHALL BE ADVISED OF PROPOSED WORK AT LEAST FORTY-EIGHT (48) HOURS PRIOR TO THE START OF ACTUAL EXCAVATION.
28. THE CONTRACTOR SHALL NOTIFY NORTHSTAR ENGINEERING AT LEAST 48 HOURS PRIOR TO BACK FILLING OF ANY PIPE WHICH STUBS TO A FUTURE PHASE OF CONSTRUCTION FOR INVERT VERIFICATION. TOLERANCE SHALL BE IN ACCORDANCE WITH THE CITY OF TURLOCK STANDARD SPECIFICATIONS.
29. WHENEVER EXISTING FACILITIES ARE REMOVED, DAMAGED, BROKEN, OR CUT IN THE INSTALLATION OF THE WORK COVERED BY THESE PLANS OR SPECIFICATIONS, SAID FACILITIES SHALL BE REPLACED AT THE CONTRACTORS EXPENSE, AFTER PROPER BACKFILLING AND/OR CONSTRUCTION, WITH MATERIALS EQUAL TO OR BETTER THAN THE MATERIALS USED IN THE ORIGINAL EXISTING FACILITIES. THE FINISHED PRODUCT SHALL BE SUBJECT TO THE APPROVAL OF THE OWNER, THE ENGINEER, AND THE RESPECTIVE REGULATORY AGENCY.
30. DUST CONTROL SHALL BE PROVIDED AT ALL TIMES, AT THE CONTRACTOR'S EXPENSE TO MINIMIZE ANY DUST NUISANCE AND SHALL BE IN ACCORDANCE WITH THE REQUIREMENTS OF THE CITY OF TURLOCK. CONTRACTOR SHALL OBTAIN A PERMIT FROM CITY OF TURLOCK FOR USE OF WATER FROM FIRE HYDRANTS FOR CONSTRUCTION PURPOSES. THE PERMIT SHALL BE APPROVED BY THE CITY OF TURLOCK FIRE DEPARTMENT.
31. SIGNING, STRIPING AND PAVEMENT MARKINGS SHALL BE IN STRICT CONFORMANCE WITH THE CITY OF TURLOCK STANDARDS AND SPECIFICATIONS.
32. AFTER CONSTRUCTION OF ALL IMPROVEMENTS, THE CONTRACTOR SHALL SUBMIT ONE SET OF REPRODUCIBLE PLANS. FINAL INVERT ELEVATIONS FOR SEWER AND STORM DRAIN LINES THAT ARE TO BE EXTENDED FOR FUTURE CONSTRUCTION SHALL ALSO BE SHOWN ON THE "AS-BUILT" PLANS ALL AS PROVIDED BY THE CONTRACTOR.
33. UNLESS OTHERWISE STATED, ALL STATIONS INDICATED ON THE IMPROVEMENT PLANS ARE REFERENCED TO THE CENTERLINE OF THE STREET. ALL STATIONS OFF CENTER ARE PERPENDICULAR TO OR RADIALLY OPPOSITE CENTERLINE STATIONS, UNLESS OTHERWISE NOTED.
34. DRIVEWAYS ON STREETS TO BE LOCATED IN THE FIELD BY THE ENGINEER AT THE TIME OF CONSTRUCTION. DRIVEWAYS SHALL NOT COINCIDE WITH WHEELCHAIR RAMPS.
35. IF THE PROJECT IS SUBJECT TO THE INDIRECT SOURCE REVIEW (ISR) REQUIREMENT, THE CONTRACTOR IS REQUIRED TO KEEP DAILY RECORDS OF THE TOTAL HOURS OF OPERATION FOR EACH PIECE OF EQUIPMENT GREATER THAN 50-HORSEPOWER BEING USED ON THE PROJECT SITE DURING CONSTRUCTION. WITHIN 30 DAYS OF COMPLETING CONSTRUCTION OF EACH PROJECT PHASE, A REPORT SUMMARIZING TOTAL HOURS OF OPERATION BY EQUIPMENT TYPE, MODEL, YEAR, AND HORSEPOWER FOR EACH PIECE OF CONSTRUCTION EQUIPMENT GREATER THAN 50-HORSEPOWER MUST BE SUBMITTED TO THE AIR DISTRICT. TO ASSIST IN THIS RECORDKEEPING, THE "DETAILED FLEET TEMPLATE" IS AVAILABLE ON THE DISTRICT'S WEBSITE AT HTTP://WWW.VALLEYAIR.ORG/ISR/ISRFORMSANDAPPLICATIONS.HTM. FOR EACH PROJECT PHASE, THE DISTRICT WILL VERIFY THAT THE FLEET DETAILS ACHIEVED THE REQUIRED EMISSION REDUCTIONS. IF THE CONTRACTOR IS NOT GOING TO MEET THE STANDARDS AND/OR RECORD KEEPING REQUIRED BY THE AIR DISTRICT, THE CONTRACTOR **SHALL** NOTIFY THE AIR BOARD **PRIOR** TO CONSTRUCTION SO THE NECESSARY MITIGATION FEE SHALL BE PAID. IF THE AIR BOARD IS NOT NOTIFIED PRIOR TO CONSTRUCTION, THE CONTRACTOR SHALL BE REQUIRED TO PAY THE PENALTY TO THE AIR BOARD.

GRADING NOTES

1. EARTHWORK SHALL BE PERFORMED IN ACCORDANCE WITH THE CITY OF TURLOCK STANDARDS AND THE PROJECT SOILS REPORT. ALL FILL AREAS SHALL BE TESTED AS REQUIRED BY THE CITY OF TURLOCK AND SHALL BE PAID FOR BY THE CONTRACTOR.
2. THE OWNER SHALL BE RESPONSIBLE FOR COST OF INITIAL TEST FOR MOISTURE DENSITY CURVE. IF THE FIRST TEST FAILS, THE CONTRACTOR SHALL BE RESPONSIBLE FOR COST OF ALL SUBSEQUENT CURVES AND TESTS.
3. THE CONTRACTOR SHALL REVIEW SITE PRIOR TO BIDDING. ALL VEGETATION AND DELETERIOUS MATERIALS SHALL BE REMOVED FROM THE SITE AT THE EXPENSE OF THE CONTRACTOR AND SHALL BE INCLUDED IN THE LUMP SUM CLEARING COST.
4. THE CONTRACTOR SHALL PRESERVE ALL STAKES AND POINTS SET FOR LINES, GRADES OR MEASUREMENT OF THE WORK IN THEIR PROPER PLACES UNTIL AUTHORIZED TO REMOVE THEM BY THE ENGINEER. ALL EXPENSES INCURRED IN REPLACING STAKES THAT HAVE BEEN REMOVED WITHOUT PROPER AUTHORITY SHALL BE PAID FOR BY THE CONTRACTOR.
5. CONTRACTOR'S PRICE SHALL INCLUDE COST TO ACHIEVE A BALANCED SITE. IT IS THE CONTRACTOR'S RESPONSIBILITY TO IMPORT AND EXPORT MATERIAL AS REQUIRED TO BALANCE SITE.
6. CONTRACTOR SHALL GRADE ALL LANDSCAPE AREAS TO WITHIN 0.10 FEET OF FINAL GRADE ELEVATIONS WITH APPROPRIATE LANDSCAPE SECTIONS INCLUDED.
7. ALL A.C. PAVING SHALL BE FOG SEALED PER SECTION 37 OF CALTRANS STANDARD SPECIFICATIONS, THE LATEST EDITION.
8. GRADE TAGS LOCATED ON CURBS REFERENCE TOP OF CURB ELEVATION UNLESS OTHERWISE NOTED. ADDITIONAL DESCRIPTIONS ARE PROVIDED TO DENOTE HORIZONTAL AND VERTICAL CHANGES IN ACCORDANCE WITH ABBREVIATIONS DEFINED ON COVER SHEET.
9. THE CONTRACTOR SHALL BE RESPONSIBLE FOR DETERMINING HIS OWN EARTHWORK QUANTITIES FOR BIDDING, CONTRACT AND CONSTRUCTION PURPOSE. IF IT APPEARS THERE WILL BE AN EXCESS OR SHORTAGE OF MATERIAL, THE CONTRACTOR SHALL NOTIFY THE ENGINEER TO DETERMINE IF POSSIBLE GRADE ADJUSTMENTS CAN BE MADE.
10. ALL LANDSCAPE AREAS THAT ABUT ANY PORTION OF THE BUILDING SHALL BE GRADED SUCH THAT THE FINISHED GRADE IN LANDSCAPE AREAS SHALL BE A MINIMUM OF EIGHT INCHES (8") BELOW FINISHED FLOOR OF THE ABUTTING BUILDING AND IN NO CASE SHALL THE LANDSCAPE AREA BE GRADED OR LANDSCAPED SUCH THAT WATER DRAINS TOWARD THE BUILDING.
11. SITE CONTRACTOR SHALL COORDINATE WITH BUILDING CONTRACTOR TO ACCOMMODATE THE PROPER CLEARANCE BETWEEN THE BOTTOM OF THE STUCCO AND THE TOP OF THE GRADE TREATMENT ALONG THE BUILDING AS APPLICABLE, IN ACCORDANCE WITH SECTION 2512.1.2. OF THE MOST CURRENT CALIFORNIA BUILDING CODE, IF THE SUBJECT BUILDING SIDING TREATMENT IS STUCCO. CONTRACTOR SHALL NOTIFY ENGINEER IF ANY GRADES ARE ADJUSTED. CONTRACTOR SHALL ALSO APPLY FLASHING WHERE APPLICABLE WITHIN AREAS OF GRADE TRANSITION.
12. SINCE THE ENGINEER CANNOT CONTROL THE EXACT METHOD OR MEANS USED BY THE CONTRACTOR DURING GRADING OPERATIONS, NOR CAN THE ENGINEER GUARANTEE THE EXACT SOIL CONDITION OVER THE ENTIRE SITE, THE ENGINEER ASSUMES NO RESPONSIBILITY FOR FINAL EARTHWORK QUANTITIES.
13. CONTRACTOR IS RESPONSIBLE FOR THE OFF HAUL AND DISPOSAL OF ANY AND ALL EXCESS DIRT FROM CONSTRUCTION SITE.

GRADING NOTES (CONT)

14. CONTRACTOR SHALL COORDINATE WITH THE EXISTING ADJOINING PROPERTY OWNERS PRIOR TO ANY WORK BEING STARTED THAT MAY EFFECT THEIR PROPERTY.
15. CONTRACTOR SHALL PROVIDE A SMOOTH TRANSITION FROM THE PROPOSED GRADING TO THE EXISTING FLOWLINE, CURB, CONCRETE, AND OR PAVEMENT ELEVATIONS.
16. ALL EXISTING WELLS AND SEPTIC TANKS SHALL BE REMOVED AND/OR ABANDONED PER THE REQUIREMENTS OF THE COUNTY HEALTH DEPARTMENT AND THE CITY OF TURLOCK. THIS WORK SHALL BE INCLUDED IN THE LUMP SUM CLEARING COST.
17. CONTRACTOR SHALL VERIFY BUILDING SUBGRADE SECTIONS WITH ARCHITECT PLANS BEFORE CONSTRUCTION. IF A DISCREPANCY EXISTS, CONTRACTOR TO NOTIFY THE ENGINEER IMMEDIATELY.
18. PRIOR TO CONSTRUCTING ANY FLATWORK THE CONTRACTOR SHALL VERIFY THE FINISH FLOOR ELEVATIONS AT ALL DOORS. NOTE THAT FINISH FLOOR ELEVATIONS MAY HAVE BEEN CHANGED DO TO FOUNDATION ADJUSTMENTS IN FIELD. CONTRACTOR SHALL HOLD ADJUSTED FINISH FLOOR GRADES, ACCOUNT FOR DOOR THRESHOLDS, AND ADJUST GRADES AS NECESSARY TO STAY IN COMPLIANCE WITH CURRENT ADA STANDARDS. CONTRACTOR SHALL NOTIFY NORTHSTAR ENGINEERING IMMEDIATELY IF ANY GRADE ADJUSTMENTS WILL CREATE ADA ACCESSIBILITY ISSUES.
19. THE VALUES SHOWN ON THE GRADING PLAN ARE FOR REFERENCE AND FEE PURPOSES ONLY. SINCE THE ENGINEER CANNOT CONTROL THE EXACT METHOD OR MEANS USED BY THE CONTRACTOR DURING GRADING OPERATIONS, NOR CAN THE ENGINEER GUARANTEE THE EXACT SOIL CONDITION OVER THE ENTIRE SITE, THE ENGINEER ASSUMES NO RESPONSIBILITY FOR FINAL EARTHWORK QUANTITIES.
20. THE VALUES SHOWN ON THE GRADING PLAN ARE TO AID THE CONTRACTOR IN DETERMINING THE QUANTITIES OF DIRT TO BE MOVED. THE CUT AND FILL QUANTITIES SHOWN INDICATE A THEORETICAL YARDAGE FIGURE AND ARE GIVEN ONLY AS A CONVENIENCE TO THE CONTRACTOR. THE QUANTITIES SHOWN SHALL NOT BE USED AS THE BASIS OF BID COSTS.
21. EARTHWORK QUANTITY VALUES SHOWN ON PAVING PLAN REPRESENT THE DIFFERENCE BETWEEN THE ESTIMATED EXISTING GRADES FROM ASBUILT DOCUMENTS COMPARED WITH THE SUBGRADE STRUCTURAL SECTIONS OF THE PROPOSED GRADING DESIGN. SEE STRUCTURAL SECTIONS IN HATCH LEGEND ON PAVING PLAN.
22. EARTHWORK QUANTITY CALCULATIONS DO NOT INCLUDE STRIPPING, SHRINKAGE, SWELL FACTORS OR MATERIAL FROM UTILITY TRENCH SPOILS.

DEWATERING NOTES

1. THE CONTRACTOR SHALL FURNISH, INSTALL, OPERATE AND MAINTAIN ALL MACHINERY APPLIANCES, AND EQUIPMENT TO MAINTAIN ALL EXCAVATIONS FREE FROM WATER DURING CONSTRUCTION. THE CONTRACTOR SHALL DISPOSE OF THE WATER SO AS NOT TO CAUSE DAMAGE TO PUBLIC OR PRIVATE PROPERTY, OR TO CAUSE A NUISANCE OR MENACE TO THE PUBLIC OR VIOLATE THE LAW. THE DEWATERING SYSTEM SHALL BE INSTALLED AND OPERATED SO THAT THE GROUNDWATER LEVEL OUTSIDE THE EXCAVATION IS NOT REDUCED TO THE EXTENT WHICH WOULD CAUSE DAMAGE OR ENDANGERED ADJACENT STRUCTURES OR PROPERTY. ALL COST FOR DEWATERING SHALL BE INCLUDED IN THE UNIT PRICE BID FOR ALL PIPE CONSTRUCTION. THE STATIC WATER LEVEL SHALL BE DRAWN DOWN A MINIMUM OF 1 FOOT BELOW THE BOTTOM OF EXCAVATIONS TO MAINTAIN THE UNDISTURBED STATE OF NATURAL SOILS AND ALLOW THE PLACEMENT OF ANY FILL TO THE SPECIFIED DENSITY. THE CONTRACTOR SHALL HAVE ON HAND, PUMPING EQUIPMENT AND MACHINERY IN GOOD WORKING CONDITION FOR EMERGENCIES AND SHALL HAVE WORKMEN AVAILABLE FOR IT'S OPERATION. DEWATERING SYSTEMS SHALL OPERATE CONTINUOUSLY UNTIL BACK FILL HAS BEEN COMPLETED TO 1 FOOT ABOVE THE NORMAL STATIC GROUNDWATER LEVEL.
2. THE CONTRACTOR SHALL CONTROL SURFACE WATER TO PREVENT ENTRY INTO EXCAVATIONS. AT EACH EXCAVATION, A SUFFICIENT NUMBER OF TEMPORARY OBSERVATION WELLS TO CONTINUOUSLY CHECK THE GROUNDWATER LEVEL SHALL BE PROVIDED.
3. SUMPS SHALL BE NO DEEPER THAN 5 FEET AND SHALL BE AT THE LOW POINT OF EXCAVATION. EXCAVATION SHALL BE GRADED TO DRAIN TO THE SUMPS.
4. THE CONTROL OF GROUNDWATER SHALL BE SUCH THAT SOFTENING OF THE BOTTOM OF EXCAVATIONS, OR FORMATION OF "QUICK" CONDITIONS OR "BOILS", DOES NOT OCCUR. DEWATERING SYSTEMS SHALL BE DESIGNED AND OPERATED SO AS TO PREVENT REMOVAL OF THE NATURAL SOILS. THE RELEASE OF GROUNDWATER AT ITS STATIC LEVEL SHALL BE PERFORMED IN SUCH A MANNER AS TO MAINTAIN THE UNDISTURBED STATE OF THE NATURAL FOUNDATIONS SOILS, PREVENT DISTURBANCE OF COMPACTED BACK FILL, AND PREVENT FLOTATION OR MOVEMENT OF STRUCTURES, PIPELINES AND SEWERS. IF AN NPDES (NATIONAL POLLUTANT DISCHARGE ELIMINATION SYSTEM) PERMIT IS REQUIRED FOR DISPOSAL OF WATER FROM CONSTRUCTION DEWATERING ACTIVITIES, IT SHALL BE OBTAINED BY THE CONTRACTOR PRIOR TO ANY DEWATERING ACTIVITIES.
5. ONE HUNDRED PERCENT STANDBY PUMPING CAPACITY SHALL BE AVAILABLE ON SITE AT ALL TIMES AND SHALL BE CONNECTED TO THE DEWATERING SYSTEM PIPING TO PERMIT IMMEDIATE USE. IN ADDITION, STANDBY AUXILIARY EQUIPMENT AND APPLIANCES FOR ALL ORDINARY EMERGENCIES, AND COMPETENT WORKMEN FOR OPERATION AND MAINTENANCE OF ALL DEWATERING EQUIPMENT SHALL BE ON SITE AT ALL TIMES. STANDBY EQUIPMENT SHALL INCLUDE EMERGENCY POWER GENERATION AND AUTOMATIC SWITCH OVER TO THE EMERGENCY GENERATOR WHEN NORMAL POWER FAILS. DEWATERING SYSTEMS SHALL NOT BE SHUT DOWN BETWEEN SHIFTS, ON HOLIDAYS, ON WEEKENDS, OR DURING WORK STOPPAGES.

STORM DRAIN NOTES

1. ALL STORM DRAIN CONSTRUCTION, MATERIALS AND WORKMANSHIP SHALL BE IN ACCORDANCE WITH THE REQUIREMENTS OF THE LATEST EDITION OF THE CALIFORNIA PLUMBING CODE AND CITY OF TURLOCK STANDARDS AND SPECIFICATIONS.
2. THE CONTRACTOR SHALL PROVIDE ALL LIGHTS, SIGNS, BARRICADES, FLAGMEN OR OTHER DEVICES NECESSARY FOR PUBLIC SAFETY.
3. THE CONTRACTOR SHALL PROVIDE ALL SHORING, BRACING, SLOPING OR OTHER PROVISIONS NECESSARY TO PROTECT WORKMEN FOR ALL AREAS TO BE EXCAVATED TO A DEPTH OF 5 FEET OR MORE. SAID PROTECTION TO BE DONE IN ACCORDANCE WITH THE REQUIREMENTS OF THE CITY OF TURLOCK DEPARTMENT OF PUBLIC WORKS, AND STATE REGULATIONS.
4. ALL MAINTENANCE HOLE RIMS TO BE ADJUSTED TO PROPOSED FINISH GRADE AFTER STREET PAVING, UNLESS OTHERWISE NOTED. COST FOR RAISING FACILITIES TO BE INCLUDED IN UNIT PRICES FOR MAINTENANCE HOLES.
5. ALL STORM DRAIN LINES SHALL BE CLEANED OF ALL SAND AND DEBRIS PRIOR TO ACCEPTANCE BY THE CITY OF TURLOCK.
6. THE CONTRACTOR SHALL EXPOSE ALL EXISTING STORM DRAIN PIPES, WHERE A CONNECTION IS TO BE MADE, AND NOTIFY THE ENGINEER IF THERE IS A DISCREPANCY BETWEEN THE SIGNED PLANS AND THE EXISTING FIELD CONDITION PRIOR TO THE START OF CONSTRUCTION.
7. STORM DRAIN CONTRACTOR SHALL VERIFY LOCATION OF ALL EXISTING UNDERGROUND UTILITIES AND WILL BE RESPONSIBLE FOR PROTECTION OF THE SAME.
8. CONTRACTOR TO BE RESPONSIBLE FOR ALL TESTING OF STORM DRAIN FACILITIES IN ACCORDANCE WITH THE CITY OF TURLOCK STANDARD SPECIFICATIONS AND PLANS.
9. STORM DRAINAGE SYSTEM WILL BE OWNED AND MAINTAINED BY THE CITY.
10. ALL STORM DRAIN PIPE MATERIALS SHALL BE IN ACCORDANCE WITH CITY STANDARDS AND SPECIFICATIONS, UNLESS OTHERWISE NOTED. CONTRACTOR SHALL HAVE PIPE MANUFACTURER PERFORM CALCULATIONS TO DETERMINE PIPE CLASS PRIOR TO CONSTRUCTION DUE TO SHALLOW DEPTH OF COVER.
11. ALL STORM DRAIN MAINTENANCE HOLES AND BASES SHALL BE PRECAST AND CONSTRUCTED IN ACCORDANCE WITH CITY OF TURLOCK STANDARDS, CONTRACTOR SHALL SET MAINTENANCE HOLE CASTING AND COVERS TO FINISH GRADE AFTER STREET IMPROVEMENTS ARE COMPLETE, AND SHALL BE RESPONSIBLE FOR LOCATION OF MAINTENANCE HOLES BENEATH THE FINISH PAVEMENT.

NPDES NOTES

1. STORM DRAIN NPDES PERMIT TO COMPLY WITH THE STATE OF CALIFORNIA'S STATEWIDE GENERAL NPDES PERMIT, REGULATING DISCHARGES OF STORM WATER ASSOCIATED WITH CONSTRUCTION ACTIVITY FROM SOIL DISTURBANCES OF ONE (1) ACRE OR MORE, A NOTICE OF INTENT (NOI) TO COMPLY WITH THE TERMS OF THE GENERAL PERMIT TO DISCHARGE STORM WATER ASSOCIATED WITH CONSTRUCTION ACTIVITY MUST BE FILED AND THE APPROPRIATE FEE PAID PRIOR TO COMMENCEMENT OF CONSTRUCTION. IN ADDITION, AT THE CONCLUSION OF THE PROJECT A NOTICE OF TERMINATION (NOT) MUST ALSO BE FILED. SUBMIT THE FEE, NOI, AND NOT TO THE STATE WATER RESOURCES CONTROL BOARD UTILIZING THE STORM WATER MULTIPLE APPLICATION AND REPORT TRACKING SYSTEM (SMARTS) AT THE FOLLOWING ADDRESS:

   WWW.SMARTS.WATERBOARDS.CA.GOV

   FEES AND PAYMENTS CAN BE MADE TO THE FOLLOWING ADDRESS:

   STATE WATER RESOURCES CONTROL BOARD
   DIVISION OF WATER QUALITY
   ATTN: STORM WATER PERMIT UNIT
   P.O. BOX 1977
   SACRAMENTO, CA 95812-1977

   IF YOU HAVE ANY QUESTIONS CALL JOSEPH HENAO, WATER QUALITY CONTROL ENGINEER, CALIFORNIA REGIONAL WATER QUALITY CONTROL BOARD, AT (916) 255-3028.

THE FOLLOWING MUST BE SUBMITTED TO THE CITY PRIOR TO BEGINNING WORK AND PRIOR TO THE ISSUANCE OF AN ENCROACHMENT PERMIT:

A) TRANSMITTAL MEMO THAT INCLUDES:
   * THE NAME AND PHONE NUMBER OF THE PERSON RESPONSIBLE FOR SWPPP IMPLEMENTATION, AND
   * IF APPLICABLE, A LISTING OF THE POST-CONSTRUCTION BEST MANAGEMENT PRACTICES THAT WILL BE INSTALLED TO SATISFY THE REQUIREMENTS OF THE CITY OF TURLOCK.
   * COPY OF SWPPP MUST REMAIN ON SITE DURING CONSTRUCTION AT ALL TIMES.

B) COPY OF A SIGNED NOTICE OF INTENT FORM OR A WASTE DISCHARGE IDENTIFICATION NUMBER.
   WDID#: CONTRACTOR TO PROVIDE PRIOR TO CONSTRUCTION; IF REQUIRED

TOPOGRAPHY NOTES

1. PLAN SET DESIGN BASED OFF OF TOPOGRAPHIC SURVEY PERFORMED ON **MAY 22, 2018.** CONTRACTOR SHALL BE AWARE THAT SINCE THIS INITIAL SURVEY THE SITE MAY HAVE CHANGED.
2. ALL EXISTING UTILITIES WERE PLOTTED FROM RECORD INFORMATION AND FIELD TOPOGRAPHY. ACTUAL LOCATIONS MAY VARY AND ADDITIONAL CROSSINGS MAY EXIST IN THE FIELD.
3. THE CONTRACTOR SHALL USE EXTREME CAUTION WHEN EXPOSING EXISTING UTILITY CROSSINGS AND SERVICES.
4. ANY DAMAGE TO EXISTING UTILITIES WILL BE THE SOLE RESPONSIBILITY OF THE CONTRACTOR.
5. PRIOR TO BEGINNING CONSTRUCTION THE CONTRACTOR SHALL CALL U.S.A. (800) 227-2600 TO HAVE THE SITE MARKED. THE CONTRACTOR SHALL POTHOLE ALL EXISTING UTILITIES TO VERIFY THAT NO CONFLICTS EXIST BETWEEN PROPOSED AND EXISTING IMPROVEMENTS.
6. CONTRACTOR/DEVELOPER SHALL OBTAIN AN ENCROACHMENT PERMIT FROM THE APPROPRIATE AGENCY TO DO ANY WORK WITHIN RIGHT-OF-WAY PRIOR TO CONSTRUCTION.
7. CONTRACTOR TO BE CAUTIOUS OF UNDERGROUND STUBS AND LINES. CONTRACTOR SHALL USE EXTREME CAUTION AS TO OTHER LINES MAY EXIST ON THE SITE THAT ARE NOT CLEARLY MARKED.
8. THE CONTRACTOR SHALL REPORT ANY EXISTING SITE ELEMENT NOT SHOWN ON THE WORKING DRAWINGS TO THE ARCHITECT OF RECORD SO THAT THE PROPER DISPENSATION OF THAT ELEMENT MAY BE MADE.
9. AN ATTEMPT HAS BEEN MADE TO SHOW ALL EXISTING STRUCTURES, UTILITIES, DRIVES, PAVEMENTS, CURBS, WALKS, ETC. IN THEIR APPROXIMATE LOCATION ON THE SURVEY AND/OR WORKING DRAWINGS. HOWEVER, OTHERS THAT ARE NOT SHOWN MAY EXIST AND MAY BE FOUND UPON VISITING THE SITE OR DURING THE CLEARING AND REMOVAL WORK. IT WILL BE THE RESPONSIBILITY OF THIS CONTRACTOR TO ACCURATELY LOCATE ALL EXISTING FACILITIES AND TO DETERMINE THEIR EXTENT. IF SUCH FACILITIES OBSTRUCT THE PROGRESS OF THE WORK AND ARE NOT INDICATED TO BE REMOVED OR RELOCATED, THEY SHALL BE REMOVED OR RELOCATED ONLY AS DIRECTED BY THE OWNER.
10. IN CONJUNCTION WITH CONTACTING USA TO LOCATE UNDERGROUND UTILITIES WITHIN THE PUBLIC RIGHT-OF-WAY IT IS HIGHLY RECOMMENDED THAT THE CONTRACTOR UTILIZE (GPR) GROUND PENETRATING RADAR UNDERGROUND SERVICES TO IDENTIFY ONSITE UTILITIES THAT MAY NOT BE VISIBLE FROM THE SURFACE.
11. CONTRACTOR SHALL REVIEW ALL OF THE CONSULTANT'S PLAN SETS FOR ADDITIONAL DEMOLITION, REPLACEMENT AND IMPROVEMENTS PRIOR TO BEGINNING OF ANY WORK. IF A CONFLICT IS FOUND THEN THE CONTRACTOR SHALL NOTIFY THE ARCHITECT AND ENGINEER IMMEDIATELY.
12. IN ACCORDANCE WITH SECTION 8771 OF THE PROFESSIONAL LAND SURVEYORS ACT
    A) MONUMENTS SET SHALL BE SUFFICIENT IN NUMBER AND DURABILITY AND EFFICIENTLY PLACED SO AS NOT TO BE READILY DISTURBED, TO ASSURE, TOGETHER WITH MONUMENTS ALREADY EXISTING, THE PERPETUATION OR FACILE REESTABLISHMENT OF ANY POINT OR LINE OF THE SURVEY.

    B) WHEN MONUMENTS EXIST THAT CONTROL THE LOCATION OF SUBDIVISIONS, TRACTS, BOUNDARIES, ROADS, STREETS, OR HIGHWAYS, OR PROVIDE HORIZONTAL OR VERTICAL SURVEY CONTROL, THE MONUMENTS SHALL BE LOCATED AND REFERENCED BY OR UNDER THE DIRECTION OF A LICENSED LAND SURVEYOR OR REGISTERED CIVIL ENGINEER PRIOR TO THE TIME WHEN ANY STREETS, HIGHWAYS, OTHER RIGHTS-OF-WAY, OR EASEMENTS ARE IMPROVED, CONSTRUCTED, RECONSTRUCTED, MAINTAINED, RESURFACED, OR RELOCATED, AND A CORNER RECORD OR RECORD OF SURVEY OF THE REFERENCES SHALL BE FILED WITH THE COUNTY SURVEYOR. THEY SHALL BE RESET IN THE SURFACE OF THE NEW CONSTRUCTION, A SUITABLE MONUMENT BOX PLACED THEREON, OR PERMANENT WITNESS MONUMENTS SET TO PERPETUATE THEIR LOCATION IF ANY MONUMENT COULD BE DESTROYED, DAMAGED, COVERED, OR OTHERWISE OBLITERATED, AND A CORNER RECORD OR RECORD OF SURVEY FILED WITH THE COUNTY SURVEYOR PRIOR TO THE RECORDING OF A CERTIFICATE OF COMPLETION FOR THE PROJECT. SUFFICIENT CONTROLLING MONUMENTS SHALL BE RETAINED OR REPLACED IN THEIR ORIGINAL POSITIONS TO ENABLE PROPERTY, RIGHT-OF-WAY AND EASEMENT LINES, PROPERTY CORNERS, AND SUBDIVISION AND TRACT BOUNDARIES TO BE REESTABLISHED WITHOUT PREVIOUS SURVEYS NECESSARILY ORIGINATING ON MONUMENTS DIFFERING FROM THOSE THAT CURRENTLY CONTROL THE AREA. IT SHALL BE THE RESPONSIBILITY OF THE GOVERNMENTAL AGENCY OR OTHERS PERFORMING CONSTRUCTION WORK TO PROVIDE FOR THE MONUMENTATION REQUIRED BY THIS SECTION. IT SHALL BE THE DUTY OF EVERY LAND SURVEYOR OR CIVIL ENGINEER TO COOPERATE WITH THE GOVERNMENTAL AGENCY IN MATTERS OF MAPS, FIELD NOTES, AND OTHER PERTINENT RECORDS. MONUMENTS SET TO MARK THE LIMITING LINES OF HIGHWAYS, ROADS, STREETS OR RIGHT-OF-WAY OR EASEMENT LINES SHALL NOT BE DEEMED ADEQUATE FOR THIS PURPOSE UNLESS SPECIFICALLY NOTED ON THE CORNER RECORD OR RECORD OF SURVEY OF THE IMPROVEMENT WORKS WITH DIRECT TIES IN BEARING OR AZIMUTH AND DISTANCE BETWEEN THESE AND OTHER MONUMENTS OF RECORD.

    C) CONTRACTOR SHALL COORDINATE WITH THE LAND SURVEYOR OF RECORD, PRIOR TO STARTING CONSTRUCTION, TO IDENTIFY ALL SURVEY MONUMENTS THAT MAY BE SUBJECT TO DISTURBANCE AND SHALL INCLUDE COSTS FOR MONUMENT PRESERVATION, REPLACEMENT, AND PREPARATION OF CORNER RECORDS OR RECORD OF SURVEY IN CONTRACTOR'S BID.

    D) THE DECISION TO FILE EITHER THE REQUIRED CORNER RECORD OR A RECORD OF SURVEY PURSUANT TO SUBDIVISION (B) SHALL BE AT THE ELECTION OF THE LICENSED LAND SURVEYOR OR REGISTERED CIVIL ENGINEER SUBMITTING THE DOCUMENT, AT CONTRACTOR'S EXPENSE.

    §732.5, §1492.5, §1810.5 OF THE CALIFORNIA STREETS AND HIGHWAYS CODES STATE: SURVEY MONUMENTS SHALL BE PRESERVED, REFERENCED, OR REPLACED PURSUANT TO SECTION 8771 OF THE BUSINESS AND PROFESSIONS CODE.
13. SEE ELECTRICAL PLANS FOR DRY UTILITY LAYOUT, DRY UTILITY DETAILS AND SPECIFICATIONS, MODIFICATIONS TO EXISTING DRY UTILITIES, SITE LIGHTING LOCATIONS AND DETAILS, POINTS OF CONNECTION, AND SLEEVE CROSSINGS. ANY AND ALL ELECTRICAL REMOVAL OR RELOCATION.

SITE LAYOUT NOTES

1. STRIPING SHALL BE APPLIED PER CITY STANDARDS AS SHOWN ON THIS PLAN SET. ADDITIONALLY STRIPING AND SIGNAGE INFORMATION SHALL FOLLOW MANUAL OF UNIFORM TRAFFIC CONTROL DEVICES (MUTCD) LATEST EDITION, MUTCD CALIFORNIA SUPPLEMENTS.
2. FLATWORK SHALL BE INSTALLED WITH CRACK CONTROL JOINTS AT APPROPRIATE SPACING.
3. CONSTRUCT CONTROL AND CONSTRUCTION JOINTS IN ACCORDANCE WITH CURRENT PORTLAND CEMENT ASSOCIATION GUIDELINES AND CITY STANDARDS; USE WHICH EVER IS MORE STRINGENT.
4. ANY UNSUITABLE MATERIAL ENCOUNTERED AT OR BELOW GRADE SHALL BE COMPLETELY REMOVED TO THE FULL DEPTH AND REPLACED WITH COMPACTED ENGINEERED FILL OR APPROVED IMPORT SOILS.
5. GEOTECHNICAL ENGINEER SHALL VERIFY MOISTURE CONTENT AND CONDITIONING PRIOR TO POURING ANY CONCRETE OR ASPHALT.
6. PRIOR TO CONSTRUCTION CONTRACTOR SHALL REVIEW EXISTING GRADES ALONG SAWCUT LINE AND TRANSITIONS TO MATCH EXISTING IMPROVEMENTS TO ENSURE BOTH DRAINAGE FLOW IS CONTINUOUS AND UNINTERRUPTED AND ACCESSIBILITY REQUIREMENTS ARE BEING MET.
7. CONTRACTOR SHALL ADJUST ANY AND ALL BOXES, STRUCTURES, ETC. TO FINISH GRADE WITH TRAFFIC RATED LID FOR VEHICULAR AREAS AND ACCESSIBLE LID FOR PEDESTRIAN AREAS BASED ON PROPOSED GRADING DESIGN SHOWN IN THIS PLAN SET.

COPYRIGHT © 2019 NORTHSTAR ENGINEERING GROUP, INC

PLOTTED: 02/06/2019 15:07 PLOTTED BY: Cgrajeda
DWGNAME: F:\18-2161 Turlock Corp Yard Transit Parking Extension\Civil\Imp Plans\C1.2 NTS.dwg

CALL BEFORE YOU DIG
U S A
800-227-2600

REGISTERED PROFESSIONAL ENGINEER
CHRISTIAN J. GRAJEDA
No. C85387
EXP. 9-30-20
02/06/19
CIVIL
STATE OF CALIFORNIA

REVISIONS			
NO.	DESCRIPTIONS	DATE	APPROVED

GENERAL NOTES AND SPECIFICATIONS

CIVIL IMPROVEMENT PLANS FOR CITY PROJECT 18-35
CORP YARD TRANSIT PARKING EXTENSION
TURLOCK, CALIFORNIA

NorthStar Engineering Group, Inc.
• CIVIL ENGINEERING • SURVEYING • PLANNING •
620 12th Street Modesto, CA 95354
(209) 524-3525 Phone (209) 524-3526 Fax

JOB #:	18-2161
DATE:	02/06/2019
SCALE:	AS SHOWN
DRAWN:	JG
DESIGN:	CW
CHK'D:	JPE

SHEET NUMBER

C1.2

CITY OF TURLOCK STANDARD DETAILS

1. PRIOR TO CONSTRUCTION, THE CONTRACTOR SHALL OBTAIN THE MOST UP TO DATE CITY OF TURLOCK STANDARDS FOR REFERENCE PRIOR TO AND DURING CONSTRUCTION.
2. THE LATEST COPY OF THE CITY OF TURLOCK STANDARDS SHALL BE CONSIDERED PART OF THIS PLAN SET.
3. IN THE EVENT OF A DISCREPANCY BETWEEN THIS PLAN SET AND CITY STANDARDS, CITY STANDARDS SHALL PREVAIL.
4. STANDARD PLAN DRAWINGS REFERENCED WITHIN THIS PLAN SET INCLUDE, BUT ARE NOT LIMITED TO THE FOLLOWING DRAWINGS:

CITY OF TURLOCK:
DWG No. C-1..... CURBS AND GUTTERS
DWG No. ST-18..... PARKING STALL LAYOUT NOTES
DWG No. ST-20..... PARKING STALL LAYOUT
DWG No. ST-21..... PARKING LAYOUT DIMENSIONS
DWG No. T-1..... TYPICAL TRENCH EXCAVATION AND BACKFILL
DWG No. T-2..... TRENCH EXCAVATION AND BACKFILL
DWG No. S-3..... STANDARD MANHOLE
DWG No. S-5..... MANHOLE FRAME AND COVER
DWG No. SD-9..... INTERIM DRAINAGE POND
DWG NO. SD-10..... INTERIM DRAINAGE POND
DWG NO. SD-11..... POND CATCH BASIN

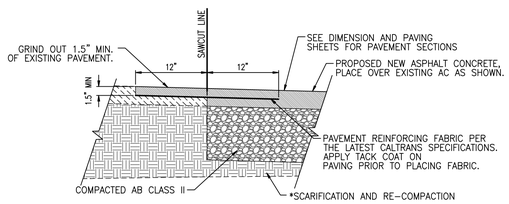

NOTES:
1. *SUBGRADE PREPARATION REQUIREMENTS PER CITY OF TURLOCK STANDARDS AND SPECIFICATIONS.

1 LAP JOINT DETAIL
NTS

NOTES:
1. *SUBGRADE PREPARATION REQUIREMENTS PER CITY OF TURLOCK STANDARDS AND SPECIFICATIONS.
2. PAVEMENT SECTIONS SHOULD BE ISOLATED FROM INTRUSION OF WATER AT ALL LOCATIONS WHERE PAVEMENTS ARE ADJACENT TO IRRIGATED LANDSCAPE AREAS THAT MAY POND WATER.

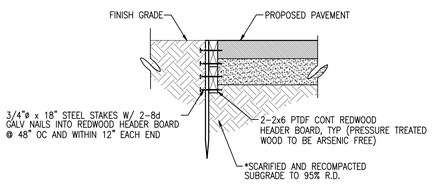

2 EDGE OF PAVEMENT REDWOOD HEADER BOARD
NTS

NOTES:
1. NO GEOTECHNICAL INVESTIGATION HAS BEEN PERFORMED FOR THIS PROJECT.
2. NO PERCOLATION TESTING HAS BEEN PERFORMED FOR THIS PROJECT. BASIN EXPANSION SHOWN ACCOUNTS ONLY FOR THE INCREASE IN VOLUME. A PERCOLATION ANALYSIS ON THE BASIN HAS NOT BEEN PERFORMED.
3. BASED ON DEPARTMENT OF WATER RESOURCES DATA, GROUNDWATER EXISTS AT AN DEPT OF APPROXIMATELY 10 FEET BELOW THE EXISTING GROUND SURFACE.

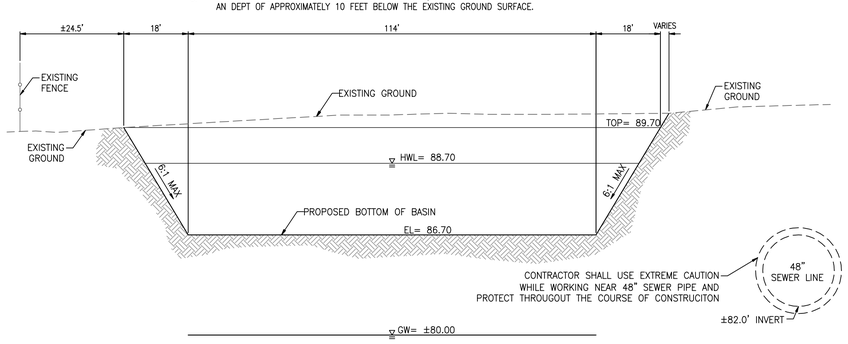

3 PROPOSED STORM DRAINAGE BASIN
NTS

NOTES:
1. NO GEOTECHNICAL INVESTIGATION HAS BEEN PERFORMED FOR THIS PROJECT.
2. NO PERCOLATION TESTING HAS BEEN PERFORMED FOR THIS PROJECT. BASIN EXPANSION SHOWN ACCOUNTS ONLY FOR THE INCREASE IN VOLUME. A PERCOLATION ANALYSIS ON THE BASIN HAS NOT BEEN PERFORMED.
3. BASED ON DEPARTMENT OF WATER RESOURCES DATA, GROUNDWATER EXISTS AT AN DEPT OF APPROXIMATELY 10 FEET BELOW THE EXISTING GROUND SURFACE.
4. CONTRACTOR SHALL HYDROSEED ANY SOIL DISTURBED DURING THE CONSTRUCTION OF THE PROPOSED BASIN PER CITY OF TURLOCK HYDROSEED MIX SPECIFICATIONS.

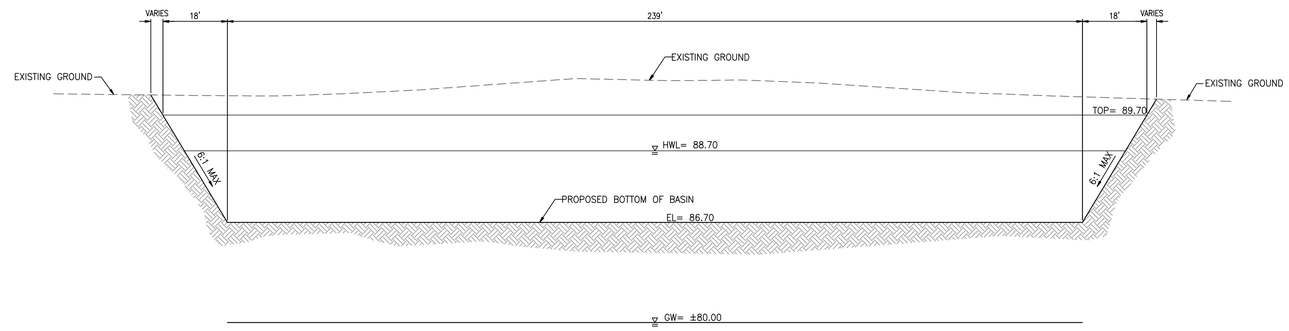

4 PROPOSED STORM DRAINAGE BASIN
NTS

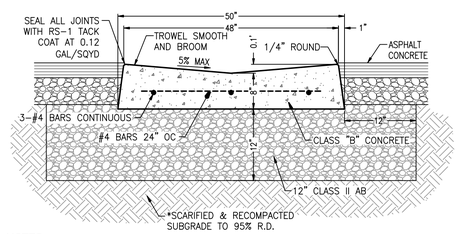

NOTES:
1. *SUBGRADE PREPARATION REQUIREMENTS PER CITY OF TURLOCK STANDARDS AND SPECIFICATIONS.
2. CONTRACTOR SHALL CONSTRUCT VALLEY GUTTER WITH MAXIMUM 2.0% CROSS SLOPE AT ALL CROSSWALK LOCATIONS.
3. SEE STRUCTURAL SECTIONS ON DIMENSION AND PAVING PLAN; SHEET C3.1.

5 TYPICAL 4' VALLEY GUTTER DETAIL
NTS

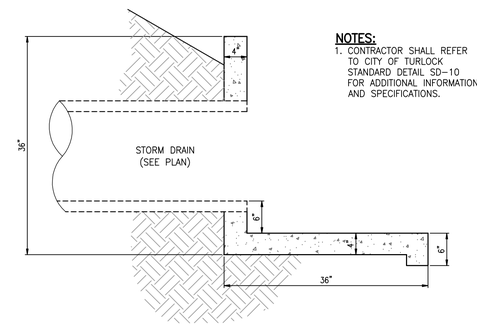

NOTES:
1. CONTRACTOR SHALL REFER TO CITY OF TURLOCK STANDARD DETAIL SD-10 FOR ADDITIONAL INFORMATION AND SPECIFICATIONS.

7 CITY OF TURLOCK STANDARD DETAIL SD-10 - OUTLET DETAIL
NTS

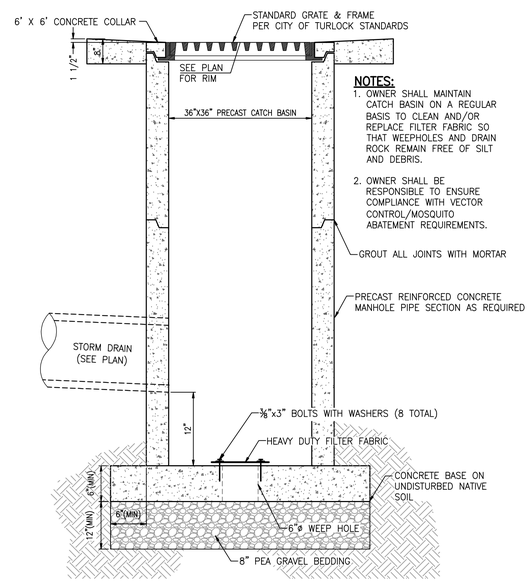

NOTES:
1. OWNER SHALL MAINTAIN CATCH BASIN ON A REGULAR BASIS TO CLEAN AND/OR REPLACE FILTER FABRIC SO THAT WEEPHOLES AND DRAIN ROCK REMAIN FREE OF SILT AND DEBRIS.
2. OWNER SHALL BE RESPONSIBLE TO ENSURE COMPLIANCE WITH VECTOR CONTROL/MOSQUITO ABATEMENT REQUIREMENTS.

6 CATCH BASIN DETAIL
NTS

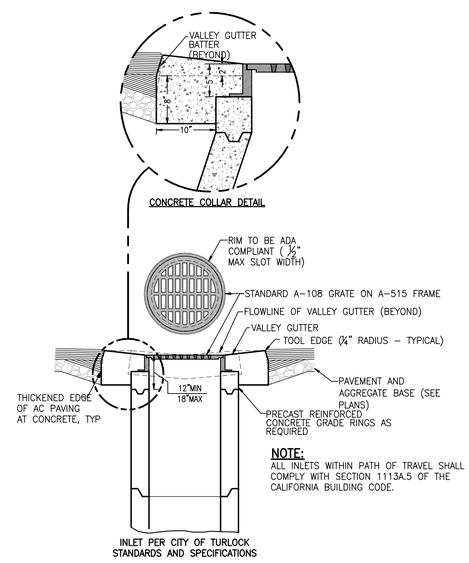

NOTE:
ALL INLETS WITHIN PATH OF TRAVEL SHALL COMPLY WITH SECTION 1113A.5 OF THE CALIFORNIA BUILDING CODE.

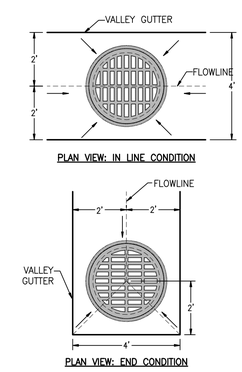

8 CATCH BASIN AT 4' WIDE VALLEY GUTTER
NTS

COPYRIGHT © 2019 NORTHSTAR ENGINEERING GROUP, INC

CALL BEFORE YOU DIG 800-227-2600

REGISTERED PROFESSIONAL ENGINEER CARLETON WAYNE GILSTRAP No. C85387 EXP. 9/30/20 02/06/19 CIVIL STATE OF CALIFORNIA

REVISIONS			
NO.	DESCRIPTIONS	DATE	APPROVED

DETAILS AND CROSS SECTIONS

CIVIL IMPROVEMENT PLANS FOR CITY OF TURLOCK PROJECT 18-35
CORP YARD TRANSIT PARKING EXTENSION
TURLOCK, CALIFORNIA

NorthStar Engineering Group, Inc.
• CIVIL ENGINEERING • SURVEYING • PLANNING •
620 12th Street Modesto, CA 95354
(209) 524-3525 Phone (209) 524-3526 Fax

JOB #:	18-2161
DATE:	02/06/2019
SCALE:	AS SHOWN
DRAWN:	JG
DESIGN:	CW
CHK'D:	JPE

SHEET NUMBER
C1.3

PLOTTED: 02/06/2019 15:07 PLOTTED BY: Cgrajeda
DRGNAME: I:\18-2161 Turlock Corp Yard Transit Parking Extension\Acad\Imp Plans\C1.3 DTL.dwg

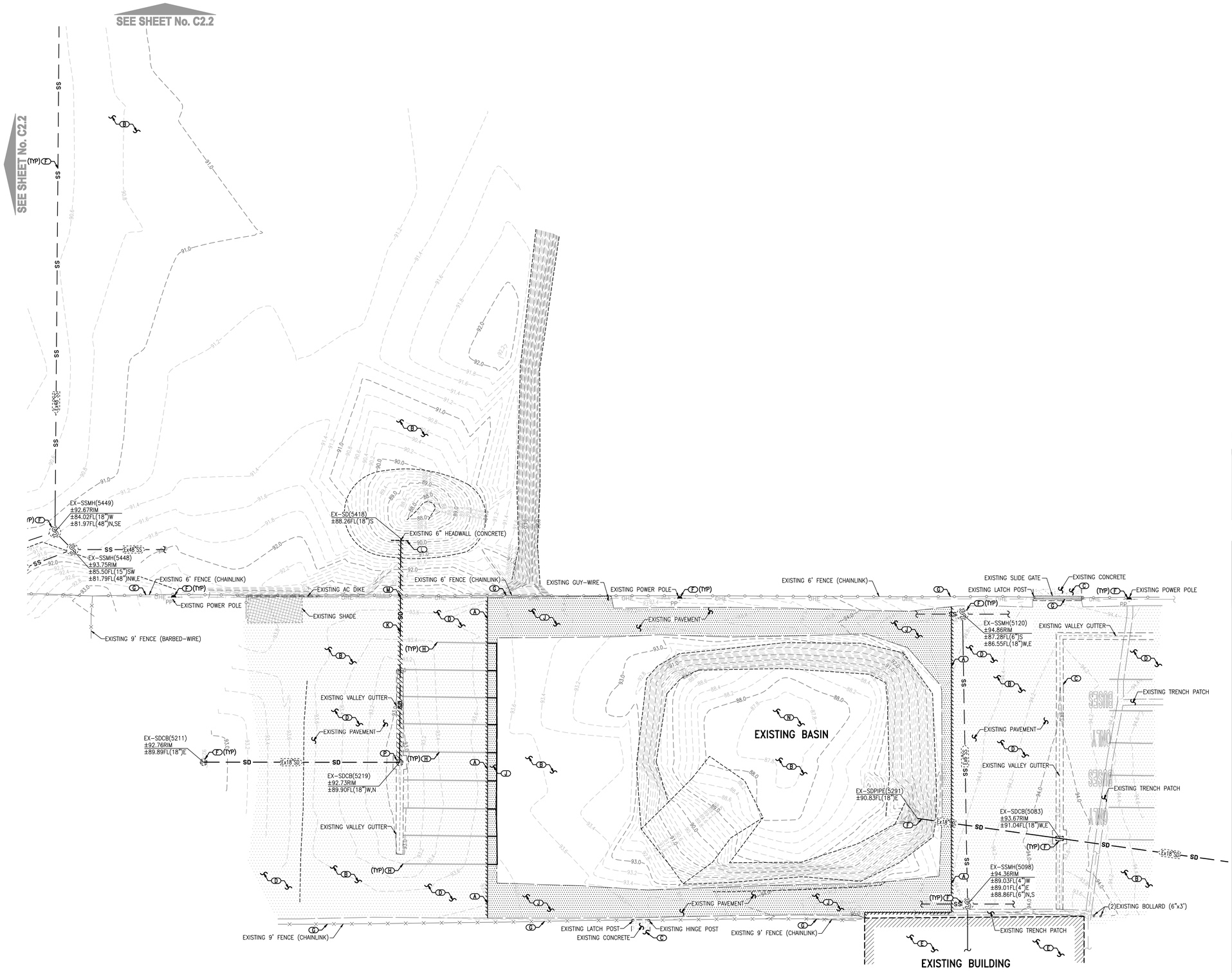

HATCH LEGEND

- EXISTING PAVEMENT
- EXISTING PAVEMENT TO BE REMOVED
- EXISTING CONCRETE
- EXISTING CONCRETE TO BE REMOVED

KEY NOTES

(A) SAWCUT AND REMOVE EXISTING PAVEMENT, CONCRETE, AND/OR CURB AS REQUIRED PER THESE PLANS. CONTRACTOR MAY NEED TO FIELD ADJUST SAWCUT LINE TO REMOVE THE CONCRETE SECTION AT THE NEAREST JOINT WHILE MAINTAINING ACCESSIBLE TRANSITION TO PROVIDE ADA COMPLIANCE BASED ON FIELD CONDITIONS.

(B) CONTRACTOR SHALL ***USE EXTREME CAUTION*** THROUGHOUT THE COURSE OF CONSTRUCTION AS ADDITIONAL UNDERGROUND LINES AND STRUCTURES NOT SHOWN ON THIS PLAN MAY EXIST AND ARE NOT CLEARLY MARKED OR VISIBLE FROM THE SURFACE. ADDITIONALLY CONTRACTOR SHALL **USE EXTREME CAUTION WHILE WORKING BY LOW HANGING POWER LINES.** IN CONJUNCTION WITH CONTACTING USA TO LOCATE UNDERGROUND UTILITIES WITHIN THE PUBLIC RIGHT-OF-WAY IT IS HIGHLY RECOMMENDED THAT THE CONTRACTOR UTILIZE (GPR) GROUND PENETRATING RADAR UNDERGROUND SERVICES TO IDENTIFY ONSITE UTILITIES THAT MAY NOT BE VISIBLE FROM THE SURFACE.

(C) CONTRACTOR SHALL PROTECT EXISTING CONCRETE, CURB AND/OR MOWSTRIP THROUGHOUT THE COURSE OF CONSTRUCTION AND REPAIR/REPLACE IF DAMAGED DURING CONSTRUCTION, AT CONTRACTOR'S EXPENSE. SEE KEYNOTE "A" ABOVE.

(D) CONTRACTOR SHALL PROTECT EXISTING PAVEMENT THROUGHOUT THE COURSE OF CONSTRUCTION AND REPAIR/REPLACE IF DAMAGED DURING CONSTRUCTION, AT CONTRACTOR'S EXPENSE.

(E) CONTRACTOR SHALL PROTECT EXISTING BUILDING AND ASSOCIATED STRUCTURES AND UTILITIES.

(F) ***USE EXTREME CAUTION*** CONTRACTOR SHALL PROTECT EXISTING STRUCTURES, OVERHEAD LINES AND UNDERGROUND UTILITIES THROUGHOUT THE COURSE OF CONSTRUCTION AND REPAIR/REPLACE IF DAMAGED DURING CONSTRUCTION, AT CONTRACTOR'S EXPENSE. COORDINATE WITH APPROPRIATE CONSULTANT AND/OR AGENCY FOR ANY RELOCATION OR REMOVAL. CONTRACTOR SHALL ADJUST TO PROPOSED GRADE AS NECESSARY WITH AN ACCESSIBLE LID IN PEDESTRIAN AREAS AND TRAFFIC RATED LID IN AREAS OF VEHICULAR TRAFFIC.

(G) CONTRACTOR SHALL PROTECT EXISTING FENCE/WALL AND GATE THROUGHOUT THE COURSE OF CONSTRUCTION AND REPAIR/REPLACE IF DAMAGED AT CONTRACTOR'S EXPENSE.

(H) CONTRACTOR SHALL PROTECT EXISTING STRIPING THROUGHOUT THE COURSE OF CONSTRUCTION AND REPAIR/REPLACE IF DAMAGED DURING CONSTRUCTION, AT CONTRACTOR'S EXPENSE.

(J) CONTRACTOR SHALL REMOVE EXISTING CONCRETE, CURB, AND/OR PAVEMENT AS SHOWN AND DISPOSE OF OFF-SITE AT THE CONTRACTOR'S EXPENSE. CONTRACTOR MAY NEED TO FIELD ADJUST SAWCUT LINE TO REMOVE THE CONCRETE SECTION AT THE NEAREST JOINT WHILE MAINTAINING ACCESSIBLE TRANSITION TO PROVIDE ACCESSIBILITY COMPLIANCE BASE ON FIELD CONDITIONS. SEE KEYNOTE "A" ABOVE FOR ADDITIONAL INFORMATION.

(K) ***USE EXTREME CAUTION*** CONTRACTOR SHALL REMOVE EXISTING STORM DRAIN LINE AND DISPOSE OF OFF-SITE AT CONTRACTOR'S EXPENSE.

(L) CONTRACTOR SHALL REMOVE EXISTING HEADWALL AND DISPOSE OF OFFSITE AT THE CONTRACTOR'S EXPENSE.

(M) CONTRACTOR SHALL ***USE EXTREME CAUTION*** TO AVOID EXISTING FOOTINGS FOR WALLS, FENCES, OR ARCHITECTURAL AMENITIES AT ALL UTILITY WALL/FENCE/AMENITY CROSSINGS. CONTRACTOR SHALL REPAIR ANY EXISTING FOOTINGS OR WALL/FENCE/AMENITY ELEMENTS IF DAMAGED DURING CONSTRUCTION, AT CONTRACTOR'S EXPENSE.

(N) CONTRACTOR SHALL FILL EXISTING BASIN AS DIRECTED ON THE GRADING AND DRAINAGE PLANS. CONTRACTOR SHALL REMOVE OR ABANDON ANY EXISTING UTILITIES ASSOCIATED WITH THE EXISTING BASIN, UNLESS OTHERWISE NOTED.

(P) CONTRACTOR SHALL REMOVE AND REPLACE EXISTING STORM DRAIN CATCH BASIN TO ALLOW FOR CONNECTION OF EXISTING AND PROPOSED STORM DRAIN PIPES.

COPYRIGHT © 2019 NORTHSTAR ENGINEERING GROUP, INC

CALL BEFORE YOU DIG 800.227.2600

REGISTERED PROFESSIONAL ENGINEER CHRISTIAN GALEPA No. C85387 EXP. 9/30-20 02/06/19 CIVIL STATE OF CALIFORNIA

NO.	DESCRIPTIONS	DATE	APPROVED
	REVISIONS		

TOPOGRAPHIC AND DEMOLITION PLAN

CIVIL IMPROVEMENT PLANS FOR CITY PROJECT 18-35 CORP YARD TRANSIT PARKING EXTENSION TURLOCK, CALIFORNIA

NorthStar Engineering Group, Inc.
• CIVIL ENGINEERING • SURVEYING • PLANNING •
620 12th Street Modesto, CA 95354
(209) 524-3525 Phone (209) 524-3526 Fax

JOB #:	18-2161
DATE:	02/06/2019
SCALE:	AS SHOWN
DRAWN:	JG
DESIGN:	CW
CHK'D:	JPE

SHEET NUMBER

C2.1

PLOTTED: 02/06/2019 15:07 PLOTTED BY: Cgalepa
DWGNAME: X:\18-2161 Turlock Corp Yard Transit Parking Extension\Civil\Imp Plans\C2.1 TPD.dwg

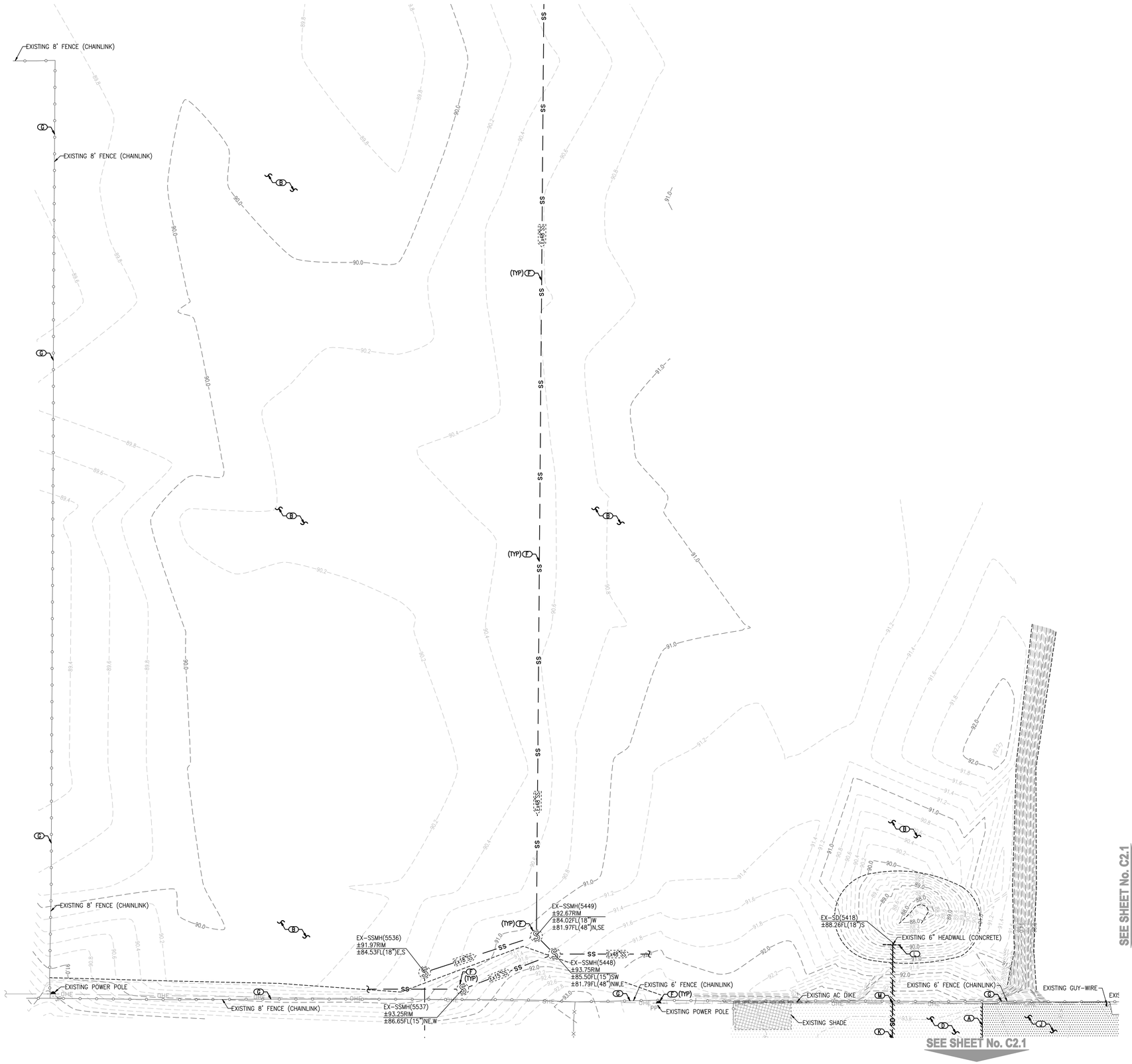

20 10 0 20
1" = 20'

HATCH LEGEND

EXISTING PAVEMENT	EXISTING PAVEMENT TO BE REMOVED
EXISTING CONCRETE	EXISTING CONCRETE TO BE REMOVED

KEY NOTES

(A) SAWCUT AND REMOVE EXISTING PAVEMENT, CONCRETE, AND/OR CURB AS REQUIRED PER THESE PLANS. CONTRACTOR MAY NEED TO FIELD ADJUST SAWCUT LINE TO REMOVE THE CONCRETE SECTION AT THE NEAREST JOINT WHILE MAINTAINING ACCESSIBLE TRANSITION TO PROVIDE ADA COMPLIANCE BASED ON FIELD CONDITIONS.

(B) CONTRACTOR SHALL ***USE EXTREME CAUTION*** THROUGHOUT THE COURSE OF CONSTRUCTION AS ADDITIONAL UNDERGROUND LINES AND STRUCTURES NOT SHOWN ON THIS PLAN MAY EXIST AND ARE NOT CLEARLY MARKED OR VISIBLE FROM THE SURFACE. ADDITIONALLY CONTRACTOR SHALL **USE EXTREME CAUTION WHILE WORKING BY LOW HANGING POWER LINES.** IN CONJUNCTION WITH CONTACTING USA TO LOCATE UNDERGROUND UTILITIES WITHIN THE PUBLIC RIGHT-OF-WAY IT IS HIGHLY RECOMMENDED THAT THE CONTRACTOR UTILIZE (GPR) GROUND PENETRATING RADAR UNDERGROUND SERVICES TO IDENTIFY ONSITE UTILITIES THAT MAY NOT BE VISIBLE FROM THE SURFACE.

(C) CONTRACTOR SHALL PROTECT EXISTING CONCRETE, CURB AND/OR MOWSTRIP THROUGHOUT THE COURSE OF CONSTRUCTION AND REPAIR/REPLACE IF DAMAGED DURING CONSTRUCTION, AT CONTRACTOR'S EXPENSE. SEE KEYNOTE "A" ABOVE.

(D) CONTRACTOR SHALL PROTECT EXISTING PAVEMENT THROUGHOUT THE COURSE OF CONSTRUCTION AND REPAIR/REPLACE IF DAMAGED DURING CONSTRUCTION, AT CONTRACTOR'S EXPENSE.

(E) CONTRACTOR SHALL PROTECT EXISTING BUILDING AND ASSOCIATED STRUCTURES AND UTILITIES.

(F) ***USE EXTREME CAUTION*** CONTRACTOR SHALL PROTECT EXISTING STRUCTURES, OVERHEAD LINES AND UNDERGROUND UTILITIES THROUGHOUT THE COURSE OF CONSTRUCTION AND REPAIR/REPLACE IF DAMAGED DURING CONSTRUCTION, AT CONTRACTOR'S EXPENSE. COORDINATE WITH APPROPRIATE CONSULTANT AND/OR AGENCY FOR ANY RELOCATION OR REMOVAL. CONTRACTOR SHALL ADJUST TO PROPOSED GRADE AS NECESSARY WITH AN ACCESSIBLE LID IN PEDESTRIAN AREAS AND TRAFFIC RATED LID IN AREAS OF VEHICULAR TRAFFIC.

(G) CONTRACTOR SHALL PROTECT EXISTING FENCE/WALL AND GATE THROUGHOUT THE COURSE OF CONSTRUCTION AND REPAIR/REPLACE IF DAMAGED AT CONTRACTOR'S EXPENSE.

(H) CONTRACTOR SHALL PROTECT EXISTING STRIPING THROUGHOUT THE COURSE OF CONSTRUCTION AND REPAIR/REPLACE IF DAMAGED DURING CONSTRUCTION, AT CONTRACTOR'S EXPENSE.

(J) CONTRACTOR SHALL REMOVE EXISTING CONCRETE, CURB, AND/OR PAVEMENT AS SHOWN AND DISPOSE OF OFF-SITE AT THE CONTRACTOR'S EXPENSE. CONTRACTOR MAY NEED TO FIELD ADJUST SAWCUT LINE TO REMOVE THE CONCRETE SECTION AT THE NEAREST JOINT WHILE MAINTAINING ACCESSIBLE TRANSITION TO PROVIDE ACCESSIBILITY COMPLIANCE BASE ON FIELD CONDITIONS. SEE KEYNOTE "A" ABOVE FOR ADDITIONAL INFORMATION.

(K) ***USE EXTREME CAUTION*** CONTRACTOR SHALL REMOVE EXISTING STORM DRAIN LINE AND DISPOSE OF OFF-SITE AT CONTRACTOR'S EXPENSE.

(L) CONTRACTOR SHALL REMOVE EXISTING HEADWALL AND DISPOSE OF OFFSITE AT THE CONTRACTOR'S EXPENSE.

(M) CONTRACTOR SHALL ***USE EXTREME CAUTION*** TO AVOID EXISTING FOOTINGS FOR WALLS, FENCES, OR ARCHITECTURAL AMENITIES AT ALL UTILITY WALL/FENCE/AMENITY CROSSINGS. CONTRACTOR SHALL REPAIR ANY EXISTING FOOTINGS OR WALL/FENCE/AMENITY ELEMENTS IF DAMAGED DURING CONSTRUCTION, AT CONTRACTOR'S EXPENSE.

(N) CONTRACTOR SHALL FILL EXISTING BASIN AS DIRECTED ON THE GRADING AND DRAINAGE PLANS. CONTRACTOR SHALL REMOVE OR ABANDON ANY EXISTING UTILITIES ASSOCIATED WITH THE EXISTING BASIN, UNLESS OTHERWISE NOTED.

(P) CONTRACTOR SHALL REMOVE AND REPLACE EXISTING STORM DRAIN CATCH BASIN TO ALLOW FOR CONNECTION OF EXISTING AND PROPOSED STORM DRAIN PIPES.

COPYRIGHT © 2019 NORTHSTAR ENGINEERING GROUP, INC

PLOTTED: 02/06/2019 15:07 PLOTTED BY: Cpngleds
DWGNAME: E:\18-2161 Turlock Corp Yard Transit Parking Extension\Civil\Imp Plans\C2.2 TPO.dwg

CALL BEFORE YOU DIG 800-227-2600

REGISTERED PROFESSIONAL ENGINEER CARLETON GALEA No. C85387 EXP. 9/30/20 02/06/19 CIVIL STATE OF CALIFORNIA

REVISIONS			
NO.	DESCRIPTIONS	DATE	APPROVED

TOPOGRAPHIC AND DEMOLITION PLAN

CIVIL IMPROVEMENT PLANS FOR CITY OF TURLOCK, CORP YARD TRANSIT PARKING EXTENSION CALIFORNIA

NorthStar Engineering Group, Inc.
• CIVIL ENGINEERING • SURVEYING • PLANNING •
620 12th Street Modesto, CA 95354
(209) 524-3525 Phone (209) 524-3526 Fax

JOB #:	18-2161
DATE:	02/06/2019
SCALE:	AS SHOWN
DRAWN:	LJG
DESIGN:	CW
CHK'D:	JPE

SHEET NUMBER

C2.2

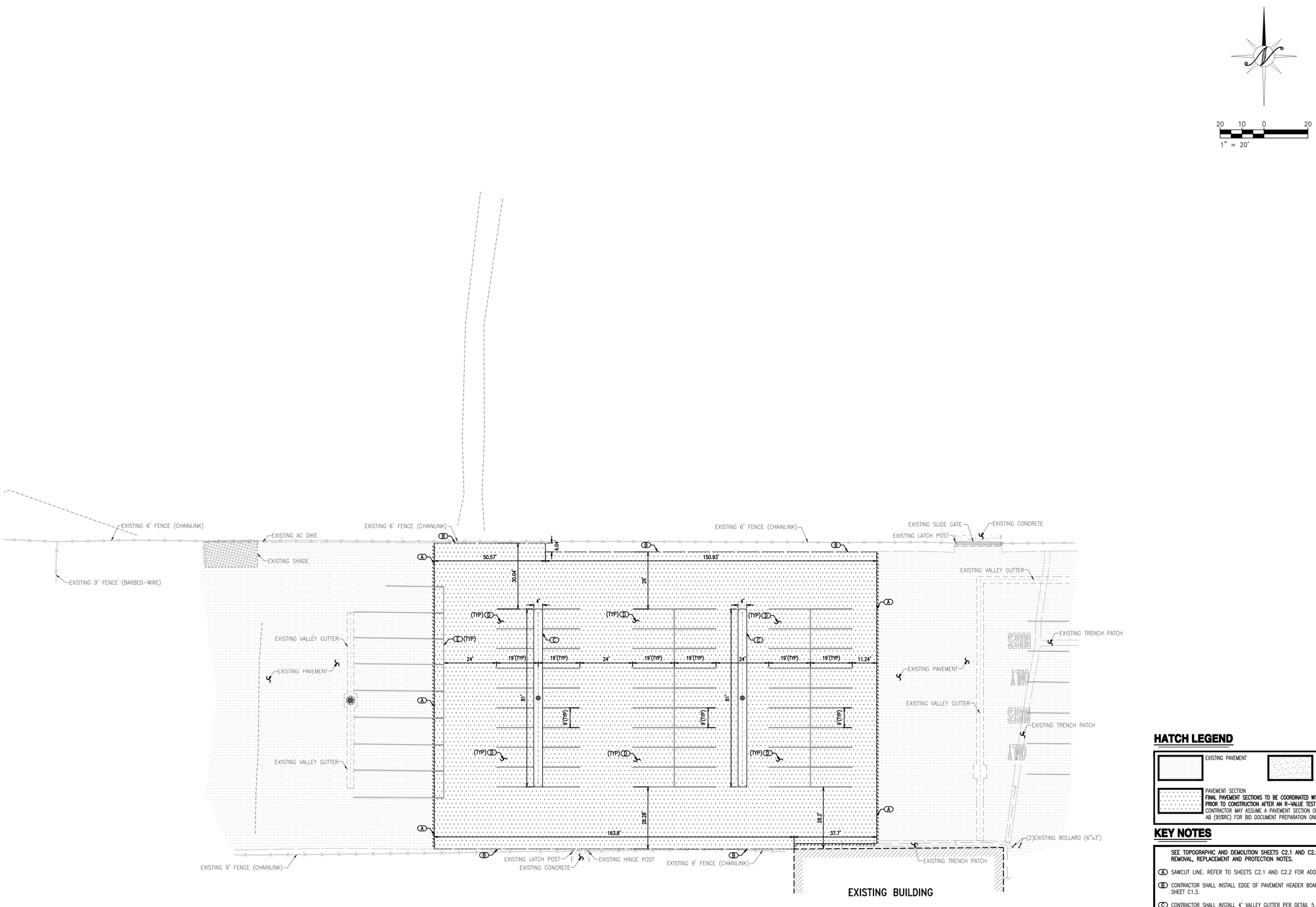

HATCH LEGEND

EXISTING PAVEMENT

EXISTING CONCRETE

PAVEMENT SECTION
FINAL PAVEMENT SECTIONS TO BE COORDINATED WITH CITY OF TURLOCK PRIOR TO CONSTRUCTION AFTER AN R-VALUE TEST HAS BEEN PERFORMED.
CONTRACTOR MAY ASSUME A PAVEMENT SECTION OF 3"AC/11.5" CLASS II AB (95%RC) FOR BID DOCUMENT PREPARATION ONLY.

KEY NOTES

SEE TOPOGRAPHIC AND DEMOLITION SHEETS C2.1 AND C2.2 FOR ADDITIONAL REMOVAL, REPLACEMENT AND PROTECTION NOTES.

(A) SAWCUT LINE. REFER TO SHEETS C2.1 AND C2.2 FOR ADDITIONAL INFORMATION.

(B) CONTRACTOR SHALL INSTALL EDGE OF PAVEMENT HEADER BOARD PER DETAIL 2 ON SHEET C1.3.

(C) CONTRACTOR SHALL INSTALL 4' VALLEY GUTTER PER DETAIL 5 ON SHEET C2.1.

(D) CONTRACTOR SHALL STRIPE STANDARD PARKING STALL PER CITY OF TURLOCK STANDARDS AND SPECIFICATIONS.

(E) CONTRACTOR SHALL RE-INSTALL STRIPING REMOVED DURING CONSTRUCTION PER CITY OF TURLOCK STANDARDS AND SPECIFICATIONS.

COPYRIGHT © _2019_ NORTHSTAR ENGINEERING GROUP, INC

CALL BEFORE YOU DIG
USA
800-227-2600

REGISTERED PROFESSIONAL ENGINEER
CAMILE IAN GALEDA
No. C85387
EXP. 9/30/20
02/06/19
CIVIL
STATE OF CALIFORNIA

REVISIONS

NO.	DESCRIPTIONS	DATE	APPROVED

DIMENSION AND PAVING PLAN

CIVIL IMPROVEMENT PLANS FOR CITY PROJECT 18-35
CORP YARD TRANSIT PARKING EXTENSION
TURLOCK, CALIFORNIA

NorthStar Engineering Group, Inc.
• CIVIL ENGINEERING • SURVEYING • PLANNING •
620 12th Street
Modesto, CA 95354
(209) 524-3525 Phone (209) 524-3526 Fax

JOB #:	18-2161
DATE:	02/06/2019
SCALE:	AS SHOWN
DRAWN:	JG
DESIGN:	CW
CHK'D:	JPE

SHEET NUMBER

C3.1

PLOTTED: 02/06/2019 15:07 PLOTTED BY: Cgrayeda
FILENAME: F:\18-2161 Turlock Corp Yard Transit Parking Extension\Civil\Imp Plans\C3.1 DIM.dwg

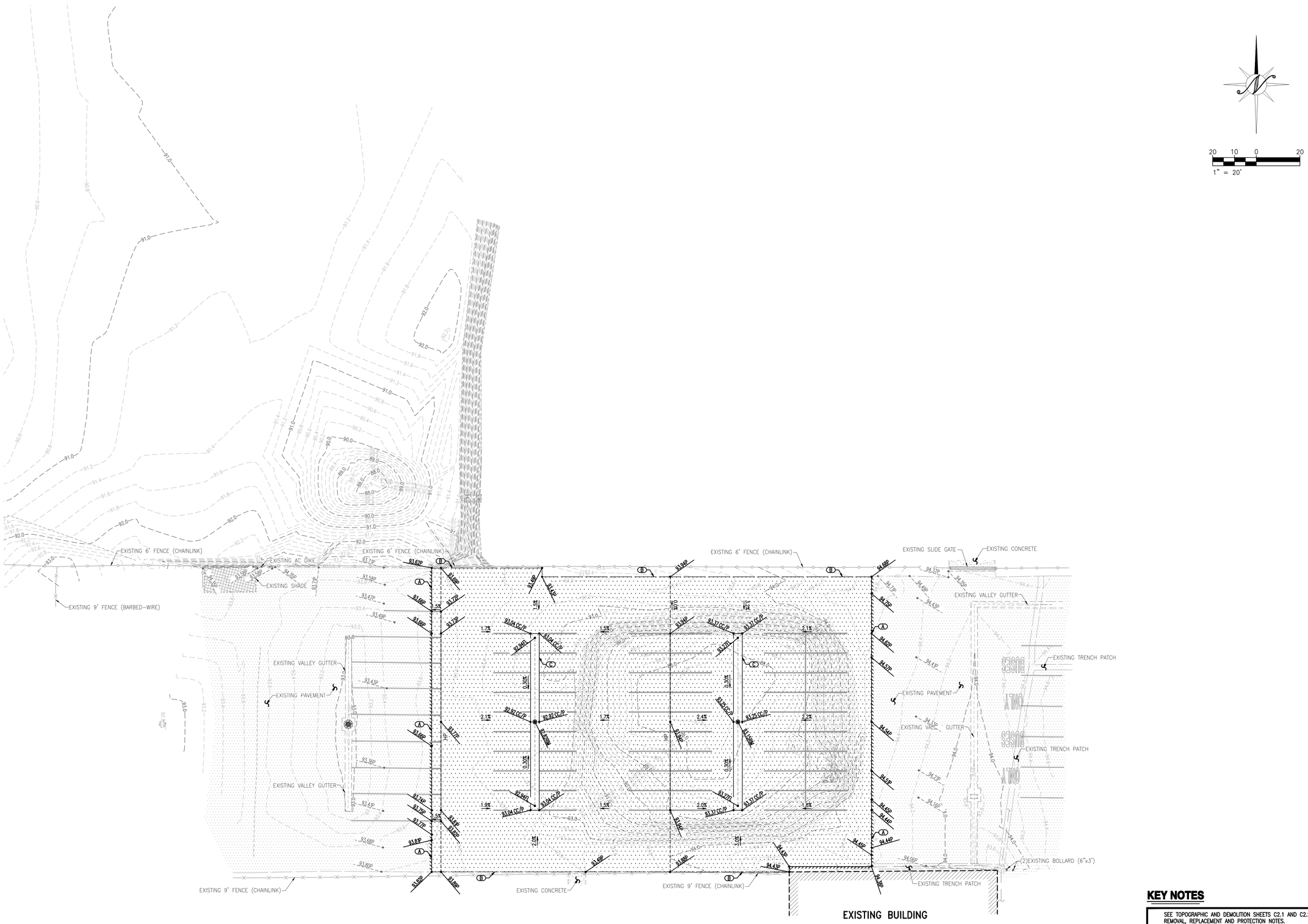

KEY NOTES

SEE TOPOGRAPHIC AND DEMOLITION SHEETS C2.1 AND C2.2 FOR ADDITIONAL REMOVAL, REPLACEMENT AND PROTECTION NOTES.

(A) SAWCUT LINE. REFER TO SHEETS C2.1 AND C2.2 FOR ADDITIONAL INFORMATION.

(B) CONTRACTOR SHALL INSTALL EDGE OF PAVEMENT HEADER BOARD PER DETAIL 2 ON SHEET C1.3.

(C) CONTRACTOR SHALL INSTALL 4' VALLEY GUTTER PER DETAIL 5 ON SHEET C2.1.

COPYRIGHT © 2019 NORTHSTAR ENGINEERING GROUP, INC

PLOTTED: 02/06/2019 15:07 PLOTTED BY: Cgrajeda
UNKNAME: X:\18-2161 Turlock Corp Yard Transit Parking Extension\Civil\Imp Plans\C4.1 GRD.dwg

CALL BEFORE YOU DIG USA 800-227-2600

REGISTERED PROFESSIONAL ENGINEER CARLETON L. GALEA No. C85387 EXP. 9/30/20 02/06/19 CIVIL STATE OF CALIFORNIA

REVISIONS

NO.	DESCRIPTIONS	DATE	APPROVED

GRADING AND DRAINAGE PLAN

CIVIL IMPROVEMENT PLANS FOR CITY PROJECT 18-35
CORP YARD TRANSIT PARKING EXTENSION
TURLOCK, CALIFORNIA

NorthStar Engineering Group, Inc.
• CIVIL ENGINEERING • SURVEYING • PLANNING •
620 12th Street Modesto, CA 95354
(209) 524-3525 Phone (209) 524-3526 Fax

JOB #:	18-2161
DATE:	02/06/2019
SCALE:	AS SHOWN
DRAWN:	JG
DESIGN:	CW
CHK'D:	JPE

SHEET NUMBER

C4.1

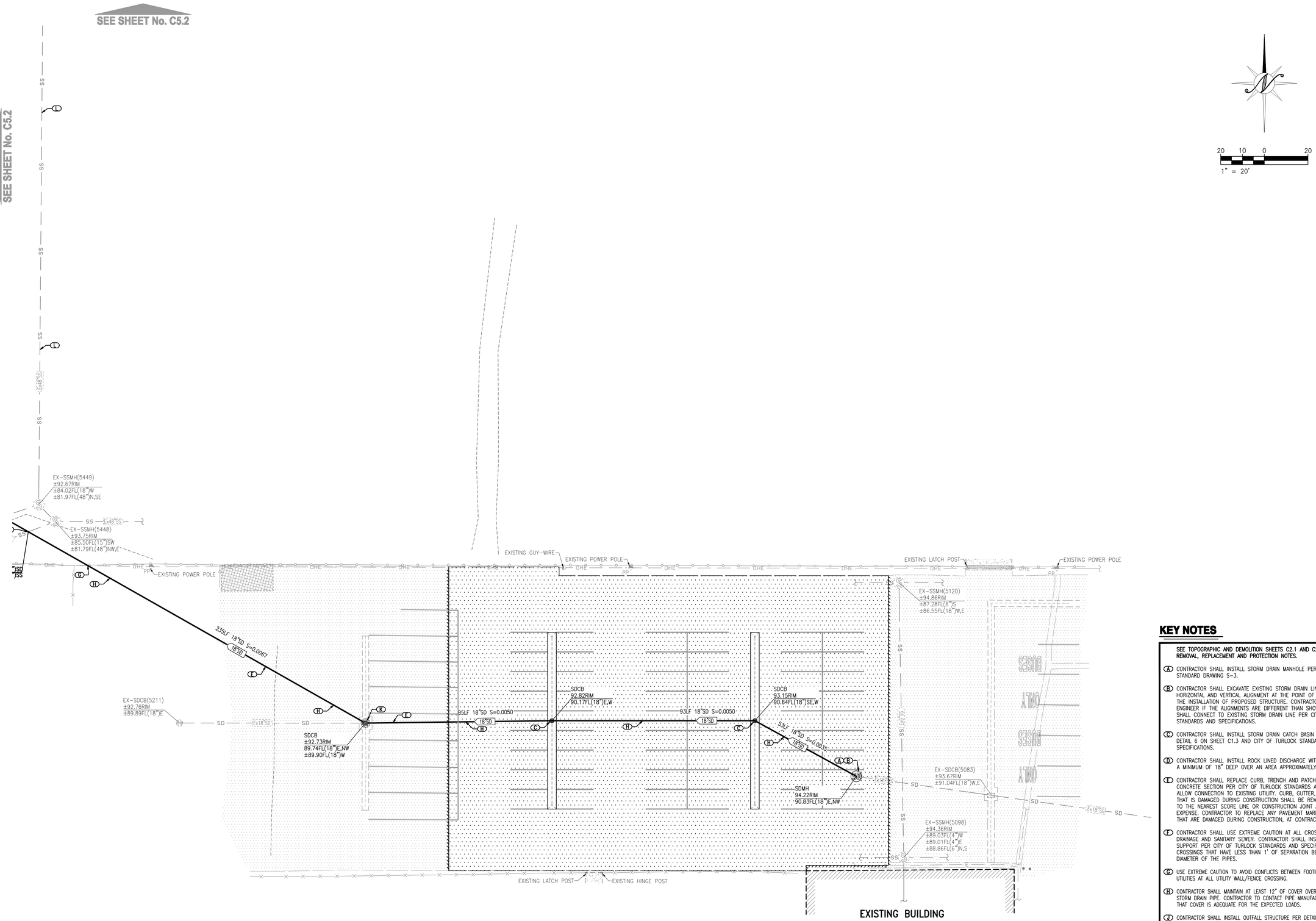

KEY NOTES

SEE TOPOGRAPHIC AND DEMOLITION SHEETS C2.1 AND C2.2 FOR ADDITIONAL REMOVAL, REPLACEMENT AND PROTECTION NOTES.

(A) CONTRACTOR SHALL INSTALL STORM DRAIN MANHOLE PER CITY OF TURLOCK STANDARD DRAWING S-3.

(B) CONTRACTOR SHALL EXCAVATE EXISTING STORM DRAIN LINE TO VERIFY THE HORIZONTAL AND VERTICAL ALIGNMENT AT THE POINT OF CONNECTION PRIOR TO THE INSTALLATION OF PROPOSED STRUCTURE. CONTRACTOR SHALL INFORM THE ENGINEER IF THE ALIGNMENTS ARE DIFFERENT THAN SHOWN. CONTRACTOR SHALL CONNECT TO EXISTING STORM DRAIN LINE PER CITY OF TURLOCK STANDARDS AND SPECIFICATIONS.

(C) CONTRACTOR SHALL INSTALL STORM DRAIN CATCH BASIN STRUCTURE PER DETAIL 6 ON SHEET C1.3 AND CITY OF TURLOCK STANDARDS AND SPECIFICATIONS.

(D) CONTRACTOR SHALL INSTALL ROCK LINED DISCHARGE WITH 2" TO 6" COBBLES A MINIMUM OF 18" DEEP OVER AN AREA APPROXIMATELY 10'X25'.

(E) CONTRACTOR SHALL REPLACE CURB, TRENCH AND PATCH PAVEMENT AND/OR CONCRETE SECTION PER CITY OF TURLOCK STANDARDS AND SPECIFICATIONS TO ALLOW CONNECTION TO EXISTING UTILITY. CURB, GUTTER, AND/OR SIDEWALK THAT IS DAMAGED DURING CONSTRUCTION SHALL BE REMOVED AND REPLACED TO THE NEAREST SCORE LINE OR CONSTRUCTION JOINT AT CONTRACTOR'S EXPENSE. CONTRACTOR TO REPLACE ANY PAVEMENT MARKINGS AND STRIPING THAT ARE DAMAGED DURING CONSTRUCTION, AT CONTRACTOR'S EXPENSE.

(F) CONTRACTOR SHALL USE EXTREME CAUTION AT ALL CROSSING BETWEEN STORM DRAINAGE AND SANITARY SEWER. CONTRACTOR SHALL INSTALL CONCRETE SUPPORT PER CITY OF TURLOCK STANDARDS AND SPECIFICATIONS AT ALL CROSSINGS THAT HAVE LESS THAN 1' OF SEPARATION BETWEEN THE OUTSIDE DIAMETER OF THE PIPES.

(G) USE EXTREME CAUTION TO AVOID CONFLICTS BETWEEN FOOTINGS AND UNDERGROUND UTILITIES AT ALL UTILITY WALL/FENCE CROSSING.

(H) CONTRACTOR SHALL MAINTAIN AT LEAST 12" OF COVER OVER THE TOP OF THE STORM DRAIN PIPE. CONTRACTOR TO CONTACT PIPE MANUFACTURER AND ENSURE THAT COVER IS ADEQUATE FOR THE EXPECTED LOADS.

(J) CONTRACTOR SHALL INSTALL OUTFALL STRUCTURE PER DETAIL 7 ON SHEET C1.3 AND CITY OF TURLOCK STANDARDS AND SPECIFICATIONS.

(K) CONTRACTOR SHALL REPLACE EXISTING STRUCTURE TO ALLOW FOR CONNECTION OF PROPOSED AND EXISTING PIPES. CONTRACTOR TO COORDINATE WITH CITY OF TURLOCK FOR REMOVAL AND REPLACEMENT.

(L) CONTRACTOR SHALL USE EXTREME CAUTION WHILE WORKING NEAR 48" SEWER PIPE AND PROTECT THROUGHOUT THE COURSE OF CONSTRUCTION.

COPYRIGHT © 2019 NORTHSTAR ENGINEERING GROUP, INC

CALL BEFORE YOU DIG 800.227.2600

REGISTERED PROFESSIONAL ENGINEER
CHRISTIAN GALEPA
No. C85387
EXP. 9/30/20
02/06/19
CIVIL
STATE OF CALIFORNIA

REVISIONS			
NO.	DESCRIPTIONS	DATE	APPROVED

COMPOSITE UTILITY PLAN

CIVIL IMPROVEMENT PLANS FOR CITY PROJECT 18-35
CORP YARD TRANSIT PARKING EXTENSION
TURLOCK, CALIFORNIA

NorthStar Engineering Group, Inc.
• CIVIL ENGINEERING • SURVEYING • PLANNING •
620 12th Street Modesto, CA 95354
(209) 524-3525 Phone (209) 524-3526 Fax

JOB #:	18-2161
DATE:	02/06/2019
SCALE:	AS SHOWN
DRAWN:	JC
DESIGN:	CW
CHK'D:	JPE

SHEET NUMBER

C5.1

PLOTTED: 02/06/2019 15:08 PLOTTED BY: Cgrugedo
UNCNAME: F:\18-2161 Turlock Corp Yard Transit Parking Extension\Civil\Imp Plans\C5.1 UTIL.dwg

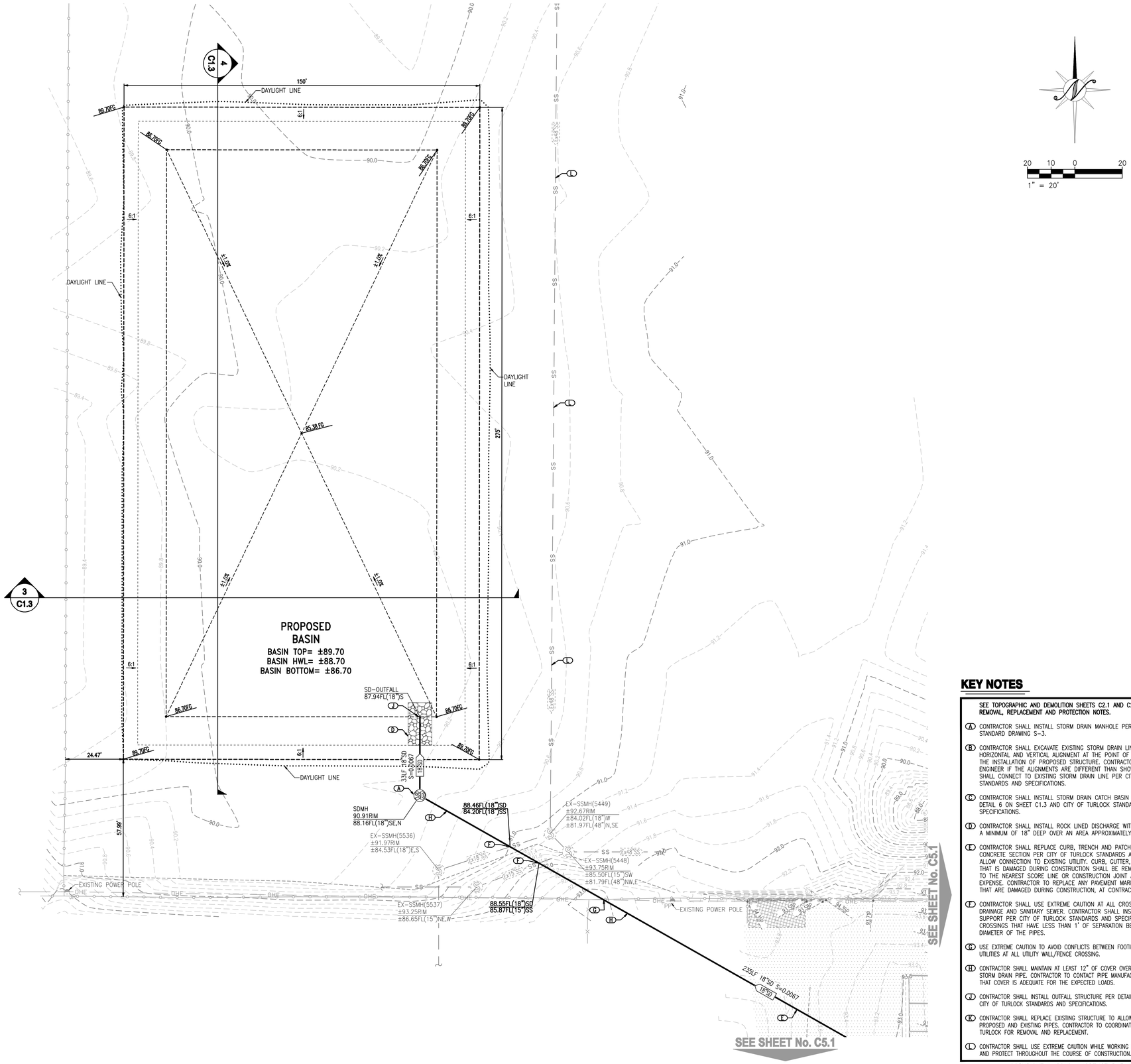

KEY NOTES

SEE TOPOGRAPHIC AND DEMOLITION SHEETS C2.1 AND C2.2 FOR ADDITIONAL REMOVAL, REPLACEMENT AND PROTECTION NOTES.

(A) CONTRACTOR SHALL INSTALL STORM DRAIN MANHOLE PER CITY OF TURLOCK STANDARD DRAWING S-3.

(B) CONTRACTOR SHALL EXCAVATE EXISTING STORM DRAIN LINE TO VERIFY THE HORIZONTAL AND VERTICAL ALIGNMENT AT THE POINT OF CONNECTION PRIOR TO THE INSTALLATION OF PROPOSED STRUCTURE. CONTRACTOR SHALL INFORM THE ENGINEER IF THE ALIGNMENTS ARE DIFFERENT THAN SHOWN. CONTRACTOR SHALL CONNECT TO EXISTING STORM DRAIN LINE PER CITY OF TURLOCK STANDARDS AND SPECIFICATIONS.

(C) CONTRACTOR SHALL INSTALL STORM DRAIN CATCH BASIN STRUCTURE PER DETAIL 6 ON SHEET C1.3 AND CITY OF TURLOCK STANDARDS AND SPECIFICATIONS.

(D) CONTRACTOR SHALL INSTALL ROCK LINED DISCHARGE WITH 2" TO 6" COBBLES A MINIMUM OF 18" DEEP OVER AN AREA APPROXIMATELY 10'X25'.

(E) CONTRACTOR SHALL REPLACE CURB, TRENCH AND PATCH PAVEMENT AND/OR CONCRETE SECTION PER CITY OF TURLOCK STANDARDS AND SPECIFICATIONS TO ALLOW CONNECTION TO EXISTING UTILITY. CURB, GUTTER, AND/OR SIDEWALK THAT IS DAMAGED DURING CONSTRUCTION SHALL BE REMOVED AND REPLACED TO THE NEAREST SCORE LINE OR CONSTRUCTION JOINT AT CONTRACTOR'S EXPENSE. CONTRACTOR TO REPLACE ANY PAVEMENT MARKINGS AND STRIPING THAT ARE DAMAGED DURING CONSTRUCTION, AT CONTRACTOR'S EXPENSE.

(F) CONTRACTOR SHALL USE EXTREME CAUTION AT ALL CROSSING BETWEEN STORM DRAINAGE AND SANITARY SEWER. CONTRACTOR SHALL INSTALL CONCRETE SUPPORT PER CITY OF TURLOCK STANDARDS AND SPECIFICATIONS AT ALL CROSSINGS THAT HAVE LESS THAN 1' OF SEPARATION BETWEEN THE OUTSIDE DIAMETER OF THE PIPES.

(G) USE EXTREME CAUTION TO AVOID CONFLICTS BETWEEN FOOTINGS AND UNDERGROUND UTILITIES AT ALL UTILITY WALL/FENCE CROSSING.

(H) CONTRACTOR SHALL MAINTAIN AT LEAST 12" OF COVER OVER THE TOP OF THE STORM DRAIN PIPE. CONTRACTOR TO CONTACT PIPE MANUFACTURER AND ENSURE THAT COVER IS ADEQUATE FOR THE EXPECTED LOADS.

(I) CONTRACTOR SHALL INSTALL OUTFALL STRUCTURE PER DETAIL 7 ON SHEET C1.3 AND CITY OF TURLOCK STANDARDS AND SPECIFICATIONS.

(K) CONTRACTOR SHALL REPLACE EXISTING STRUCTURE TO ALLOW FOR CONNECTION OF PROPOSED AND EXISTING PIPES. CONTRACTOR TO COORDINATE WITH CITY OF TURLOCK FOR REMOVAL AND REPLACEMENT.

(L) CONTRACTOR SHALL USE EXTREME CAUTION WHILE WORKING NEAR 48" SEWER PIPE AND PROTECT THROUGHOUT THE COURSE OF CONSTRUCTION.

COPYRIGHT © _2019_ NORTHSTAR ENGINEERING GROUP, INC

CALL BEFORE YOU DIG 800-227-2600

REGISTERED PROFESSIONAL ENGINEER CARLETON WALDEN No. C85387 EXP. 9/30-20 02/06/19 CIVIL STATE OF CALIFORNIA

NO.	DESCRIPTIONS	DATE	APPROVED

REVISIONS

COMPOSITE UTILITY PLAN

CIVIL IMPROVEMENT PLANS FOR CITY PROJECT 18-35
CORP YARD TRANSIT PARKING EXTENSION
TURLOCK, CALIFORNIA

NorthStar Engineering Group, Inc.
• CIVIL ENGINEERING • SURVEYING • PLANNING •
620 12th Street Modesto, CA 95354
(209) 524-3525 Phone (209) 524-3526 Fax

JOB #:	18-2161
DATE:	02/06/2019
SCALE:	AS SHOWN
DRAWN:	LJG
DESIGN:	CW
CHK'D:	JPE

SHEET NUMBER

C5.2

PLOTTED: 02/06/2019 15:08 PLOTTED BY: Cpojeda
DRGNAME: F:\18-2161 Turlock Corp Yard Transit Parking Extension\Civil\Imp Plans\C5.2 UTIL.dwg

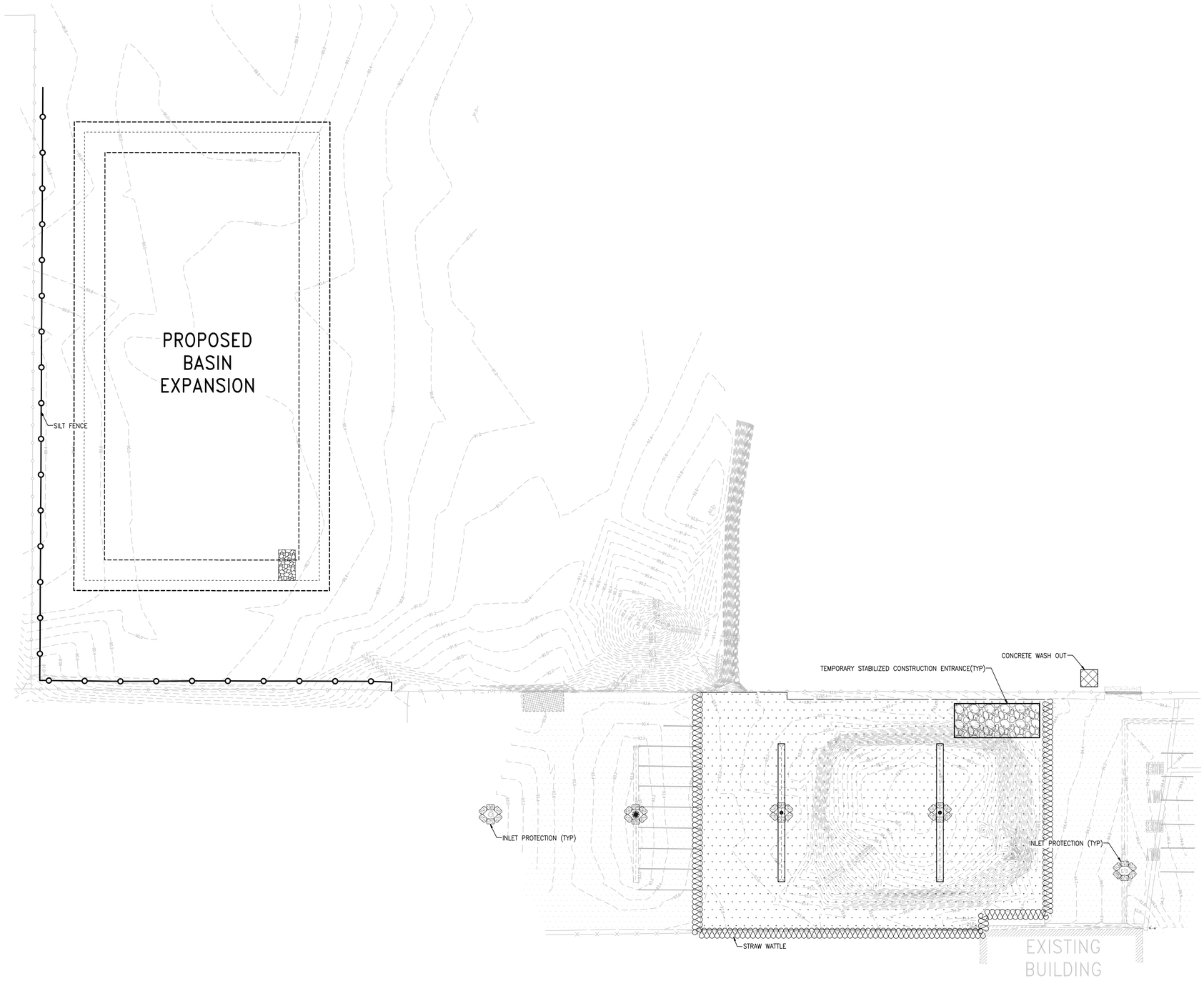

30 15 0 30

1" = 30'

LEGEND

	STRAW WATTLE (SEE DETAIL "F")
	CONCRETE WASHOUT AREA (SEE DETAIL "G")
	INLET PROTECTION (SEE DETAILS "A", "B", C, AND "D") SHALL BE PLACED AROUND ALL CATCH BASINS WITHIN THE PROJECT DRAINAGE LIMITS; INCLUDING BUT NOT LIMITED TO ALL LANDSCAPE DRAINAGE. ALSO, INLET PROTECTION SHALL BE PLACED AT THE FIRST INLET DOWNSTREAM FROM THE PROJECT SITE (ON EITHER DIRECTION).
	TEMPORARY STABILIZED CONSTRUCTION ENTRANCE (SEE DETAIL "H") TO BE DETERMINED BY CONTRACTOR IN FIELD.
	SILT FENCE (SEE DETAIL "E")

COPYRIGHT © 2019 NORTHSTAR ENGINEERING GROUP, INC

CALL BEFORE YOU DIG 800-227-2600

REGISTERED PROFESSIONAL ENGINEER
CAMILLE IAN GALEDA
No. C85387
EXP. 9/30/20
02/06/19
CIVIL
STATE OF CALIFORNIA

REVISIONS

NO.	DESCRIPTIONS	DATE	APPROVED

EROSION CONTROL PLAN

CIVIL IMPROVEMENT PLANS FOR CITY PROJECT 18-35
CORP YARD TRANSIT PARKING EXTENSION
TURLOCK, CALIFORNIA

NorthStar Engineering Group, Inc.
• CIVIL ENGINEERING • SURVEYING • PLANNING •
620 12th Street Modesto, CA 95354
(209) 524-3525 Phone (209) 524-3526 Fax

JOB #:	18-2161
DATE:	02/06/2019
SCALE:	AS SHOWN
DRAWN:	JG
DESIGN:	CW
CHK'D:	JPE

SHEET NUMBER

C6.1

PLOTTED: 02/06/2019 15:08 PLOTTED BY: Cgalgeda
DWGNAME: F:\18-2161 Turlock, Corp Yard Transit Parking Extension\Civil\Imp Plans\C6.1 ERS.dwg

EROSION CONTROL NOTES

1. THESE PLANS DEPICT APPROPRIATE MEASURES TO CONTROL EROSION ON THE SITE TO BE GRADED AS SHOWN ON THE PLANS THE NATIVE VEGETATION WILL BE REMOVED ONLY FROM THOSE AREAS TO BE GRADED. AREAS OUTSIDE OF AND DOWNSLOPE OF THE LIMITS OF GRADING WILL BE PROTECTED FROM SILT LADEN RUNOFF BY PERIMETER SILT FENCES AS DEPICTED ON THIS PLAN. SLOPED AREAS WHICH HAVE BEEN STRIPPED OF VEGETATION AND NEW SLOPES OVER FOUR FEET HIGH CREATED DURING THE GRADING OPERATION WILL BE TRACKWALKED & HYDROSEEDED.
2. ALL EROSION SEDIMENT STRUCTURES SHALL BE INSPECTED AFTER EACH RAINSTORM AND SHALL BE CLEANED OUT AS NECESSARY.
3. A STABILIZED CONSTRUCTION ENTRANCE SHALL BE INSTALLED PRIOR TO COMMENCEMENT OF GRADING. THE LOCATION IS SHOWN ON THESE PLANS. ALL CONSTRUCTION TRAFFIC ENTERING THE PAVED ROAD MUST CROSS THE ENTRANCE.
4. THE CONTRACTOR IS RESPONSIBLE FOR ALL ASPECTS OF EROSION CONTROL FOR THE LIFE OF THE PROJECT AND SHALL INSTALL AND MAINTAIN ANY DEVICES AND MEASURES NECESSARY TO THE SATISFACTION OF THE CITY ENGINEER, DURING CONSTRUCTION ACTIVITIES.
5. TO MINIMIZE EROSION OF GRADED BANKS, ALL GRADED BANKS AND STOCKPILE AREAS SHALL BE HYDROSEEDED, LANDSCAPED OR SEALED.
6. STRAW BALES, PIECES OF WOOD, FABRIC OR OTHER SUITABLE MATERIALS SHALL BE USED TO PREVENT SEDIMENT LADEN RUNOFF FROM ENTERING ANY COMPLETED STORM DRAIN INLETS. THESE PROTECTION MEASURES SHALL BE MAINTAINED UNTIL THE PROJECT IS COMPLETED.
7. WHEN TEMPORARY STRUCTURES HAVE SERVED THEIR INTENDED PURPOSE AND THE CONTRIBUTING DRAINAGE AREA HAS BEEN PROPERLY STABILIZED. THE EMBANKMENT AND RESULTING SEDIMENT DEPOSITS ARE TO BE LEVELED OR OTHERWISE DISPOSED OF BY THE CONTRACTOR AS RECOMMENDED BY THE SOILS ENGINEER.
8. GRADED AREAS MUST DRAIN AWAY FROM THE FACE OF SLOPES AT THE CONCLUSION OF EACH WORKING DAY. DRAINAGE SHALL BE DIRECTED TOWARDS DRAINAGE INLETS.
9. TEMPORARY EROSION CONTROL DEVICES SHOWN ON THIS PLAN WHICH INTERFERE WITH THE WORK SHALL BE RELOCATED OR MODIFIED AS AND WHEN THE INSPECTOR SO DIRECTS AS THE WORK PROGRESSES.
10. ALL LOOSE SOIL AND DEBRIS SHALL BE REMOVED FROM THE STREET AREAS UPON STARTING OPERATIONS AND PERIODICALLY THEREAFTER AS DIRECTED BY THE INSPECTOR.
11. HYDROMULCHING OF SLOPES OVER 5' IN HEIGHT SHALL BE COMPLETED BETWEEN SEPTEMBER 1 AND OCTOBER 1 OF THE YEAR IN WHICH THEY ARE CONSTRUCTED OR IMMEDIATELY AFTER THEIR CONSTRUCTION IF THEY ARE COMPLETED AFTER OCTOBER 1ST. APPLICATION RATES SHALL BE AS FOLLOWS AS REQUIRED BY CITY OF TURLOCK:

HYDROSEED MIX: BOTANICAL NAME	(COMMON NAME)	MIN. % PURITY	MIN. % GERMINATION	LB/ACRE
ARISTIDA TERNIPES VAR. HAMULOSA	(THREE-AWN)	90%	85%	2
BROMUS CARINATUS	(CALIFORNIA BROME)	90%	85%	2
ELYMUS GLAUCUS	(BLUE WILD RYE)	90%	85%	4
ELYMUS TRACHYCAULUS SSP. TRACHYCAULUS	(SLENDER WHEATGRASS)	90%	85%	3
MELICA CALIFORNICA	(CALIFORNIA ONION GRASS)	90%	85%	2
MUHLENBERGIA RIGENS	(DEER GRASS)	90%	85%	4
NASSELLA LEPIDA	(FOOTHILL NEEDLEGRASS)	90%	85%	6
TRIFOLIUM HIRTUM	('HYKON' ROSE CLOVER)	90%	85%	10
CELLULOSE FIBER MULCH				2000
ORGANIC BINDER WITH HYDROSEED SLURRY				50
16-20-0-S FERTILIZER				300

12. WHEN DIRECTED BY THE INSPECTOR, A 12-INCH BERM SHALL BE MAINTAINED ALONG THE TOP OF THE SLOPE OF THOSE FILLS ON WHICH GRADING IS NOT IN PROGRESS.
13. STAND-BY CREWS SHALL BE ALERTED BY THE PERMITTEE OR CONTRACTOR FOR EMERGENCY WORK DURING RAINSTORMS.
14. SEWER OR STORM DRAIN TRENCHES THAT DRAIN THROUGH BASIN DIKES SHALL BE PLUGGED WITH SANDBAGS FROM TOP OF PIPE TO TOP OF DIKE.
15. ALL UTILITY TRENCHES SHALL BE BLOCKED WHEN DIRECTED BY THE DESIGN ENGINEER AT THE PRESCRIBED INTERVALS FROM THE BOTTOM TO TOP WITH DOUBLE ROW OF SANDBAGS PRIOR TO BACKFILL. SANDBAGS ARE TO BE PLACED WITH ALTERNATE HEADER AND STRETCHER COURSES. THE INTERVALS PRESCRIBED BETWEEN SANDBAG BLOCKING SHALL DEPEND ON THE SLOPE OF THE GROUND SURFACE, BUT NOT TO EXCEED THE FOLLOWING:

GRADE OF GROUND SURFACE OR STREET	INTERVAL
LESS THAN 2%	AS REQUIRED
2% TO 4%	100 FEET
4% TO 10%	50 FEET
OVER 10%	25 FEET

16. PROVIDE VELOCITY CHECK DAMS IN ALL UNPAVED STREET AREAS AT THE INTERVALS INDICATED ABOVE. VELOCITY CHECK DAMS MAY BE CONSTRUCTED OF SANDBAGS, TIMBER, OR OTHER EROSION RESISTANT MATERIALS APPROVED BY THE INSPECTOR, AND SHALL EXTEND COMPLETELY ACROSS THE STREET OR CHANNEL AT RIGHT ANGLES TO THE CENTERLINE. EARTH DIKES MAY NOT BE USED AS VELOCITY CHECK DAMS.
17. AFTER SEWER AND UTILITY TRENCHES ARE BACKFILLED AND COMPACTED, THE SURFACES OVER SUCH TRENCHES SHALL BE MOUNDED SLIGHTLY TO PREVENT CHANNELING OF WATER IN THE TRENCH AREA. CARE SHOULD BE EXERCISED TO PROVIDE FOR CROSS-FLOW AT FREQUENT INTERVALS WHERE TRENCHES ARE NOT ON THE CENTERLINE OF A CROWNED STREET. REMOVE ALL CHECK DAMS PRIOR TO BACKFILL.
18. TO CONTROL SEDIMENT ENTERING FIELD INLETS, PLACE TWO STRAW BALES IN THE CONCRETE V-DITCH AT THE SIDE OPENING OF THE FIELD INLET AT THE LOCATIONS SHOWN ON THIS PLAN.
19. EXCEPT AS OTHERWISE DIRECTED BY THE INSPECTOR, ALL DEVICES SHOWN SHALL BE IN PLACE AT THE END OF EACH WORKING DAY OR WHEN DIRECTED BY THE INSPECTOR.
20. ALL BASINS AND CHECK DAMS SHALL HAVE BEEN PUMPED DRY, AND ALL DEBRIS AND SILT REMOVED WITHIN 24 HOURS AFTER EACH STORM.
21. SANDBAGS SHALL BE STOCKPILED ON-SITE, READY TO BE PLACED IN POSITION WHEN RAIN FORECAST IS 40
22. EXPOSED SLOPES SHALL BE PROTECTED BY VEGETATION COVER OR FABRIC COVER AS APPROVED BY THE CITY ENGINEER.
23. WHEN PAD ELEVATION OF ADJACENT LOTS OR ELEVATION BETWEEN STREET AND LOT ARE SEPARATED BY MORE THAN 6 FEET, A MINIMUM 12" BERM SHALL BE MAINTAINED ALONG THE PROPERTY LINE SEPARATING THE LOTS, AND THE BERM SHALL DIRECT THE WATER TO THE OUTLET. VELOCITY CHECK DAMS SHALL BE INSTALLED BETWEEN THE OUTLET ON THE LOT AND THE STREET.
24. ALL EROSION CONTROL MEASURES SHALL BE IN COMPLIANCE WITH THE LATEST EDITION OF THE CASQA STORMWATER MANAGEMENT HANDBOOK.
25. ALL FINISHED PADS SHALL BE PROTECTED.
26. THE FOLLOWING PLANS ARE ACCURATE FOR EROSION CONTROL PURPOSES ONLY.
27. THE INFORMATION ON THIS PLAN IS INTENDED TO BE USED AS A GUIDELINE FOR THE CONTRACTOR AND SUBCONTRACTORS TO COMPLY WITH THE REQUIREMENTS OF THE STATE WATER RESOURCES CONTROL BOARD. FIELD CONDITIONS MAY NECESSITATE MODIFICATIONS TO THIS PLAN.
28. NO ONSITE FUELING SHALL TAKE PLACE.
29. SEAL OR SKIRT BETWEEN TRAILER & GRADING TO PREVENT EXPOSURE TO DRAIN.
30. STRAW WATTLES INSTALLED ON A SLOPE SHALL CONFORM TO THE GUIDELINES SPECIFIED BY THE UNITED STATES ENVIRONMENTAL PROTECTION AGENCY NATIONAL POLLUTANT DISCHARGE ELIMINATION SYSTEM BEST MANAGEMENT PRACTICES.
31. EROSION RESISTANT VEGETATION SHOULD BE MAINTAINED ON THE FACE OF ALL SLOPES.
32. CONTRACTOR SHALL REFER TO THE PROJECT STORM WATER POLLUTION PLAN (SWPPP) FOR ALL PRE AND POST CONSTRUCTION EROSION CONTROL MEASURES AND BEST MANAGEMENT PRACTICES (BMPs).
33. ALL BASINS SHALL BE HYDROSEEDED IN ACCORDANCE TO THE PROJECT SWPPP.
34. CONTRACTOR SHALL INSTALL DRAIN INLET PROTECTION FOR ALL CATCH BASINS LOCATED IN THE VICINITY OF WORK. THIS INCLUDES ANY CATCH BASINS LOCATED IN THE PUBLIC RIGHT-OF-WAY, AS WELL AS ANY ONSITE CATCH BASINS.
35. CONTRACTOR SHALL ENSURE THAT CONSTRUCTION ACTIVITIES DO NOT DEPOSIT SEDIMENT ON TO THE PUBLIC ROADWAY, SIDEWALKS AND GUTTERS.
36. CONTRACTOR SHALL USE STREET SWEEPING OR OTHER DRY SWEEPING METHODS, AS NECESSARY, TO REMOVE CONSTRUCTION RELATED SEDIMENT FROM PAVEMENT IN THE PROJECT AREA AND PROJECT ROADWAY.
37. CONTRACTOR SHALL SCHEDULE WORK FOR DRY WEATHER DAYS WHEN NO RAIN IS IN THE IMMEDIATE FORECAST.

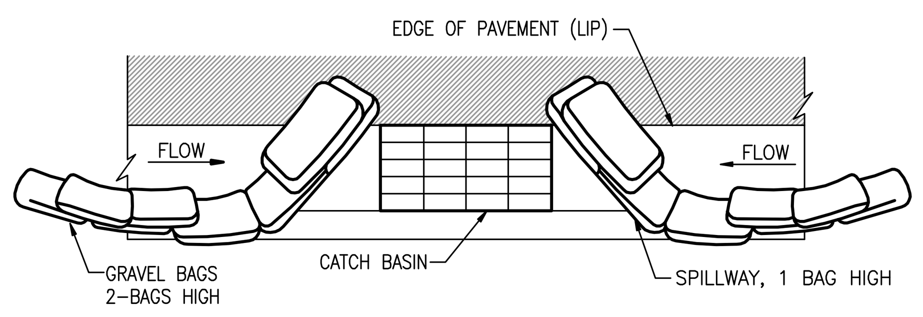

A TYPICAL PROTECTION FOR INLET ON SUMP
NTS

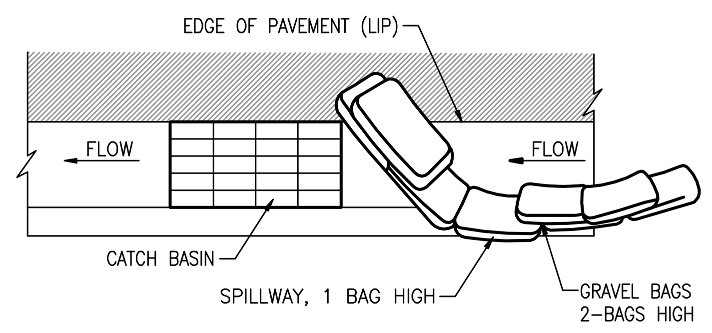

B TYPICAL PROTECTION FOR INLET ON GRADE
NTS

NOTES:
1. INTENDED FOR SHORT-TERM USE.
2. USE TO INHIBIT NON-STORM WATER FLOW.
3. ALLOW FOR PROPER MAINTENANCE AND CLEAN UP.
4. BAGS MUST BE REMOVED AFTER ADJACENT OPERATION IS COMPLETED.
5. NOT APPLICABLE IN AREAS WITH HIGH SILTS AND CLAYS WITHOUT FILTER FABRIC.

DI PROTECTION TYPE 3 – GRAVEL BAG

THE GRAVEL BAG BARRIER (TYPE 3) IS SHOWN IN THE FIGURES. FLOW FROM A SEVERE STORM SHOULD NOT OVERTOP THE CURB. IN AREAS OF HIGH CLAY AND SILTS, USE FILTER FABRIC AND GRAVEL AS ADDITIONAL FILTER MEDIA. GRAVEL BAGS SHOULD BE USED DUE TO THEIR HIGH PERMEABILITY.

1. USE SAND BAG MADE OF GEOTEXTILE FABRIC (NOT BURLAP) AND FILL WITH 0.75 IN. ROCK OR 0.25 IN. PEA GRAVEL.
2. CONSTRUCT ON GENTLY SLOPING STREET.
3. LEAVE ROOM UPSTREAM OF BARRIER FOR WATER TO POND AND SEDIMENT TO SETTLE.
4. PLACE SEVERAL LAYERS OF SAND BAGS – OVERLAPPING THE BAGS AND PACKING THEM TIGHTLY TOGETHER.
5. LEAVE GAP OF ONE BAG ON THE TOP ROW TO SERVE AS A SPILLWAY. FLOW FROM A SEVERE STORM (E.G., 10 YEAR STORM) SHOULD NOT OVERTOP THE CURB.
6. THIS DETAIL IS TO BE USED ON EXISTING STREETS WHERE SILTED FLOW IS TO BE INTERCEPTED (CAUGHT) PRIOR TO ENTERING THE STORM DRAIN SYSTEM. SANDBAGS CAN ALSO BE USED WHEN THE ROUGH GRADED STREETS HAVE POURED INPLACE CONCRETE SURROUNDING THE INLET TO CREATE A "FLOW LINE" WHERE A DAM CAN BE ACHIEVED TO PROTECT THE STORM SYSTEM FROM THE INFLOW OF SEDIMENT.

C DI PROTECTION - TYPE 3
NTS

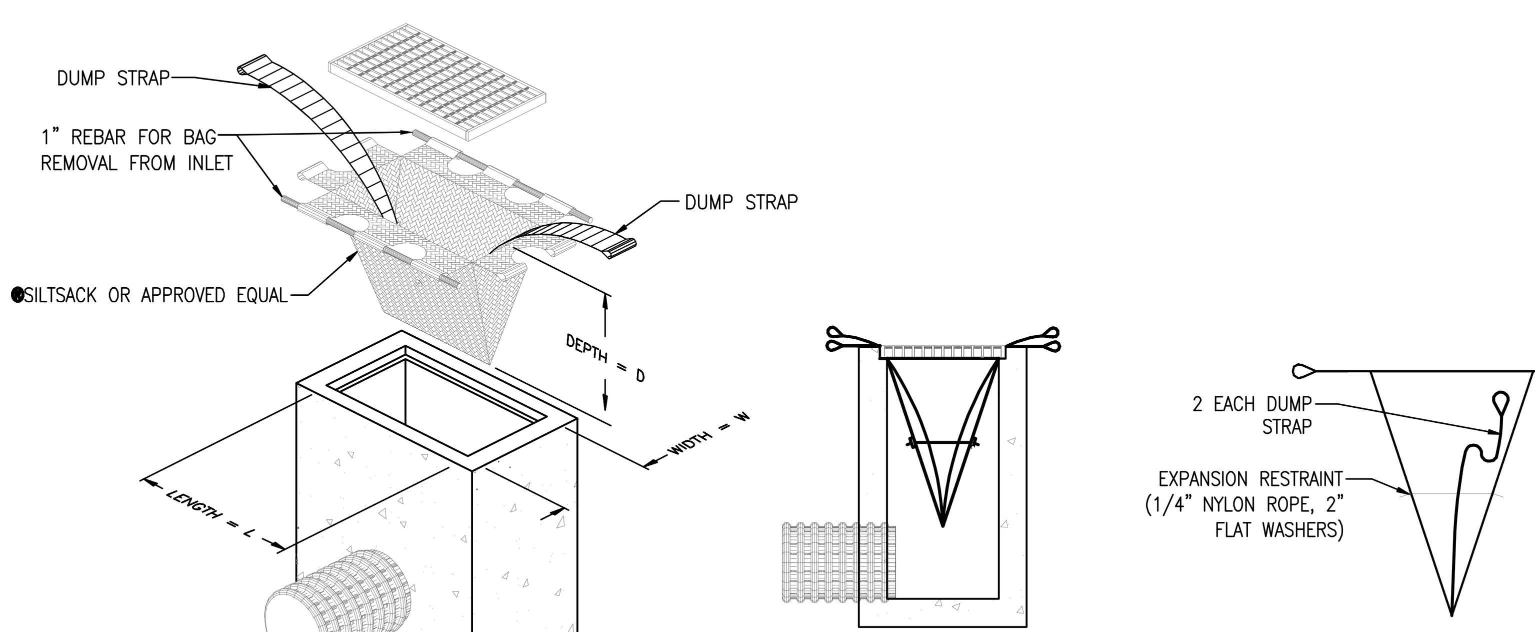

INSTALLATION DETAIL

BAG DETAIL

D TYPICAL SILTSACK CONSTRUCTION
NTS

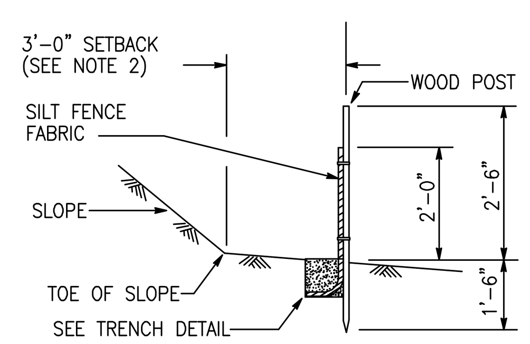

E1 SECTION A-A
NTS

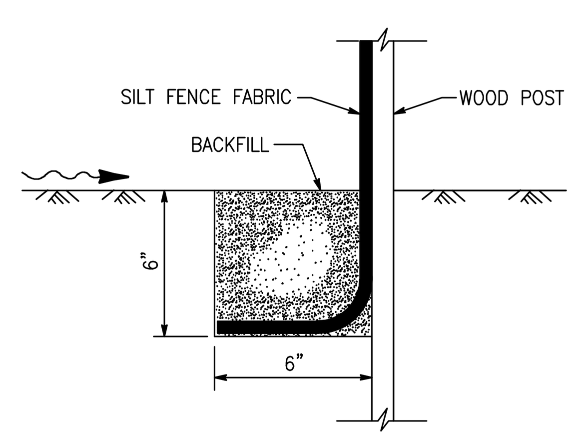

E2 TRENCH DETAIL - SECTION
NTS

TEMPORARY SILT FENCE
DESIGN AND CONSTRUCTION SPECIFICATIONS:

1. THE TEMPORARY SILT FENCE SHALL BE CONSTRUCTED IN STRICT ACCORDANCE WITH THE PLANS AND SPECIFICATIONS OF LATEST EDITION OF THE CALIFORNIA STORMWATER HANDBOOK, DETAIL SE-1. WHERE THERE IS A DISCREPANCY BETWEEN THIS DETAIL AND THE CALIFORNIA STORMWATER HANDBOOK, THE HANDBOOK SHALL GOVERN.
2. THE DOWN STREAM END OF THE TEMPORARY SILT FENCE SHALL HAVE THE LAST 8' ANGLED UP SLOPE.
3. SETBACK DIMENSIONS MAY VARY TO FIT FIELD CONDITIONS.
4. POSTS TO OVERLAP AND FENCE FABRIC TO FOLD AROUND EACH POST ONE FULL TURN. SECURE FABRIC WITH 4 STAPLES FOR EACH POST.
5. POSTS SHALL BE DRIVEN TIGHTLY TOGETHER TO PREVENT POTENTIAL FLOW-THROUGH OF SEDIMENT AT THE JOINT. THE TOPS OF THE POSTS SHALL BE SECURED TO EACH OTHER WITH WIRE.
6. FOR EACH END POST, FENCE FABRIC SHALL BE FOLDED AROUND TWO POSTS ONE FULL TURN AND SECURED WITH 4 STAPLES.
7. MINIMUM OF 4 STAPLES SHALL BE INSTALLED PER POST. DIMENSIONS SHOWN ARE TYPICAL.
8. MAINTENANCE OPENINGS SHALL BE CONSTRUCTED IN A MANNER TO ENSURE THAT SEDIMENT IS RETAINED BY THE TEMPORARY SILT FENCE.
9. JOINT SECTIONS SHALL NOT BE PLACED AT SUMP LOCATIONS.

E3 TEMPORARY SILT FENCE
NTS

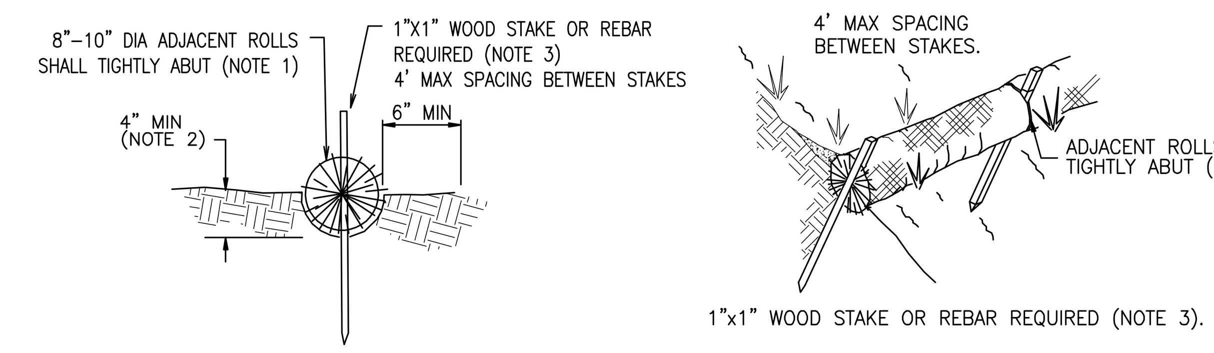

NOTES:
1. WATTLES SHALL BE PLACED IN A ROW WITH ENDS TIGHTLY ABUTTING.
2. EACH WATTLE SHALL BE EMBEDDED IN THE SOIL A MINIMUM OF 4 INCHES. AFTER CONSTRUCTION, CONTRACTOR TO REMOVE WATTLES AND FILL CAVITY.
3. WATTLES SHALL BE SECURELY ANCHORED IN PLACE BY TWO STAKES OR REBARS DRIVEN THROUGH THE WATTLES. THE FIRST STAKE IN EACH WATTLE SHALL BE DRIVEN TOWARD THE PREVIOUSLY LAID WATTLE TO FORCE THE WATTLES TOGETHER.
4. THE DIKE SHALL BE INSPECTED AFTER EACH STORM, AND REPAIR OR REPLACEMENT SHALL BE MADE PROMPTLY AS NEEDED. THE WATTLES SHALL BE REMOVED ONCE THEY HAVE SERVED THEIR PURPOSE SO AS NOT TO BLOCK OR IMPEDE STORM FLOW OR DRAINAGE.

F STRAW WATTLE DETAIL
NTS

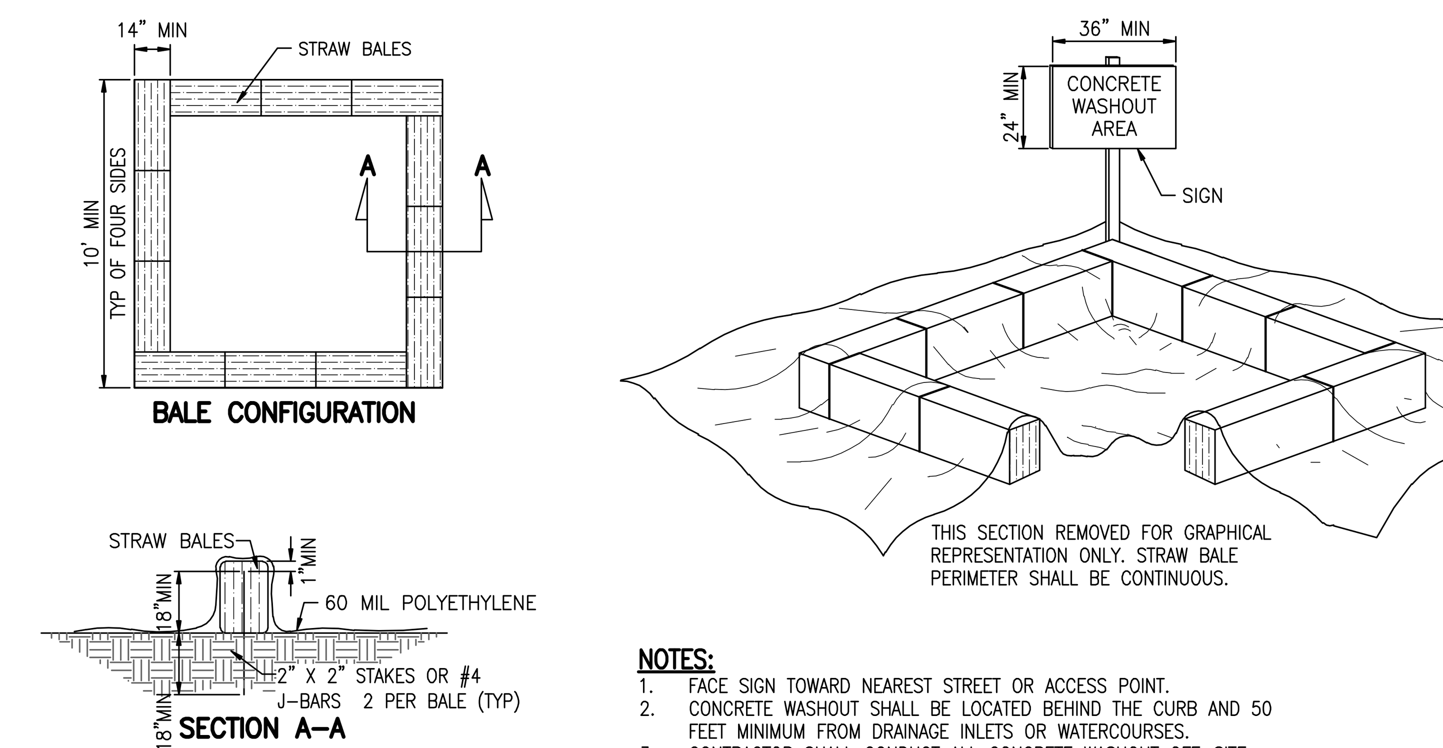

NOTES:
1. FACE SIGN TOWARD NEAREST STREET OR ACCESS POINT.
2. CONCRETE WASHOUT SHALL BE LOCATED BEHIND THE CURB AND 50 FEET MINIMUM FROM DRAINAGE INLETS OR WATERCOURSES.
3. CONTRACTOR SHALL CONDUCT ALL CONCRETE WASHOUT OFF-SITE.

G CONCRETE WASHOUT
NTS

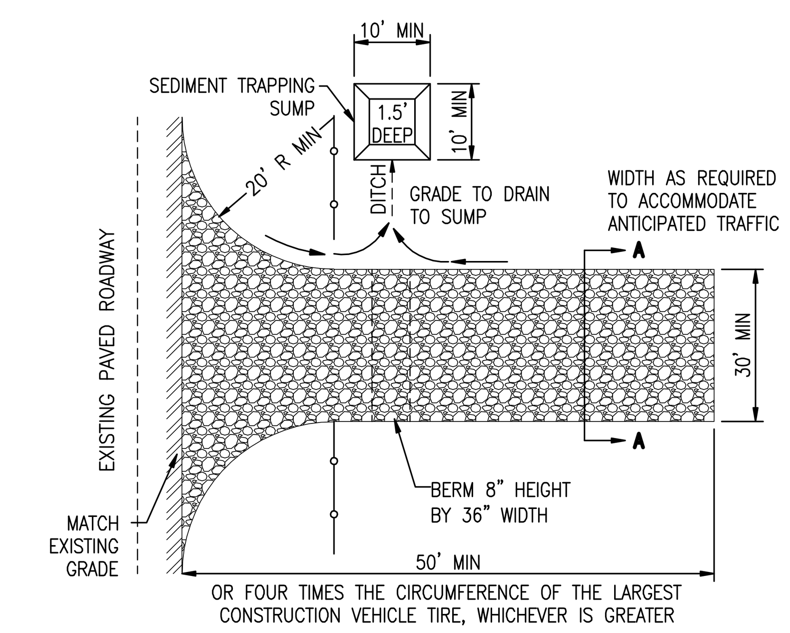

NOTE:
CONSTRUCT SEDIMENT BARRIER AND CHANNELIZE RUNOFF TO SEDIMENT TRAPPING DEVICE.

H1 PLAN (OPTION 1)
NTS

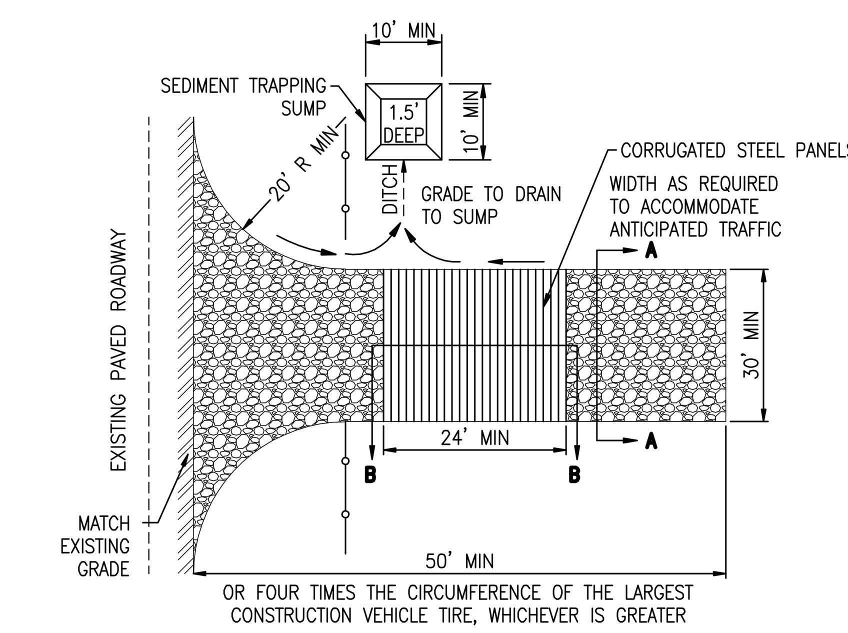

NOTE:
CONSTRUCT SEDIMENT BARRIER AND CHANNELIZE RUNOFF TO SEDIMENT TRAPPING DEVICE.

H2 PLAN (OPTION 2)
NTS

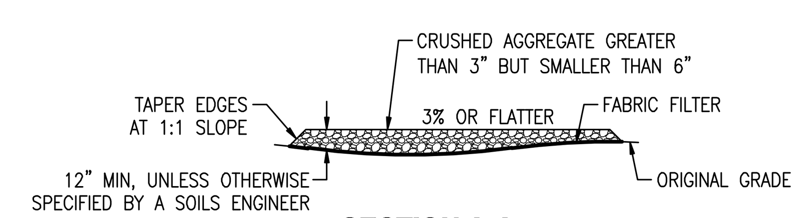

SECTION A-A
NTS

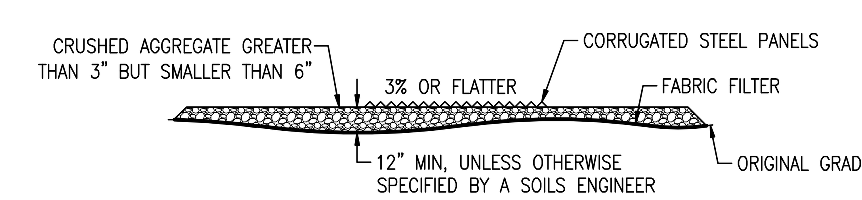

SECTION B-B
NTS

TEMPORARY STABILIZED CONSTRUCTION ENTRANCE
DESIGN AND CONSTRUCTION SPECIFICATIONS:
1. THE TEMPORARY STABILIZED CONSTRUCTION ENTRANCE SHALL BE CONSTRUCTED IN STRICT ACCORDANCE WITH THE PLANS AND SPECIFICATIONS OF THE LATEST EDITION OF THE CALIFORNIA STORMWATER HANDBOOK, DETAIL TC-1. WHERE THERE IS A DISCREPANCY BETWEEN THIS DETAIL AND THE CALIFORNIA STORMWATER HANDBOOK, THE HANDBOOK SHALL GOVERN.
2. CONTRACTOR SHALL CONSTRUCT A STABILIZED CONSTRUCTION ENTRANCE AT EACH ENTRANCE TO THE PROJECT SITE AND SHALL BE CONSTRUCTED ON LEVEL GROUND.
3. THE MATERIAL FOR CONSTRUCTION OF THE PAD SHALL BE 3 TO 6 INCH DIA. STONE.
4. THE THICKNESS FOR THE PAD SHALL NOT BE LESS THAN 12 INCHES OR AS RECOMMENDED BY SOILS ENGINEER.
5. THE WIDTH OF THE PAD SHALL NOT BE LESS THAN 30' OR THE FULL WIDTH OF ALL POINTS OF INGRESS OR EGRESS, WHICHEVER IS GREATER.
6. THE LENGTH OF THE PAD SHALL BE AS REQUIRED, BUT NOT LESS THAN 50 FEET.
7. THE ENTRANCE SHALL BE MAINTAINED IN A CONDITION THAT WILL PREVENT TRACKING OR FLOWING OF SEDIMENT ONTO PUBLIC RIGHT-OF-WAY. THIS MAY REQUIRE PERIODIC TOP DRESSING WITH ADDITIONAL STONE AS CONDITIONS DEMAND, AND REPAIR AND/OR CLEAN OUT ANY MEASURES USED TO TRAP SEDIMENT. ALL SEDIMENT SPILLED, DROPPED, WASHED OR TRACKED ONTO PUBLIC RIGHT-OF-WAY SHALL BE REMOVED IMMEDIATELY.
8. WHEN NECESSARY, WHEELS SHALL BE CLEANED TO REMOVE SEDIMENT PRIOR TO ENTRANCE ONTO PUBLIC RIGHT-OF-WAY. WHEN WASHING IS REQUIRED, IT SHALL BE DONE ON AN AREA STABILIZED WITH CRUSHED STONE THAT DRAINS INTO AN APPROVED SEDIMENT TRAP, SEDIMENT BASIN, OR SEDIMENT SWALE. ALL SEDIMENT SHALL BE PREVENTED FROM ENTERING ANY STORM DRAIN, DITCH, OR WATERCOURSE THROUGH USE OF GRAVEL BAGS, GRAVEL, BOARDS, OR OTHER APPROVED METHODS.
9. CONTRACTOR TO REMOVE AND DISPOSE OF STABILIZED CONSTRUCTION ENTRANCE UPON COMPLETION OF CONSTRUCTION.
10. CONSTRUCTION AND MAINTENANCE SHALL BE IN ACCORDANCE WITH THE 2003 CALIFORNIA STORMWATER BMP HANDBOOK.

H3 TEMPORARY STABILIZED CONSTRUCTION ENTRANCE
NTS

COPYRIGHT © 2019 NORTHSTAR ENGINEERING GROUP, INC

PLOTTED: 02/06/2019 15:08 PLOTTED BY: Cgrajeda
DWGNAME: F:\18-2161 Turlock Corp Yard Transit Parking Extension\Civil\Imp Plans\C6.2 ERS.dwg

CALL BEFORE YOU DIG 800-227-2600

REGISTERED PROFESSIONAL ENGINEER CHRISTIAN GRAJEDA No. C85387 EXP. 9-30-20 02/06/19 CIVIL STATE OF CALIFORNIA

NO.	REVISIONS DESCRIPTIONS	DATE	APPROVED

EROSION CONTROL NOTES AND DETAILS
CIVIL IMPROVEMENT PLANS FOR CITY PROJECT 18-35
CORP YARD TRANSIT PARKING EXTENSION
TURLOCK, CALIFORNIA

NorthStar Engineering Group, Inc.
• CIVIL ENGINEERING • SURVEYING • PLANNING •
620 12th Street Modesto, CA 95354
(209) 524-3525 Phone (209) 524-3526 Fax

JOB #:	18-2161
DATE:	02/06/2019
SCALE:	AS SHOWN
DRAWN:	JG
DESIGN:	CW
CHK'D:	JPE

SHEET NUMBER
C6.2