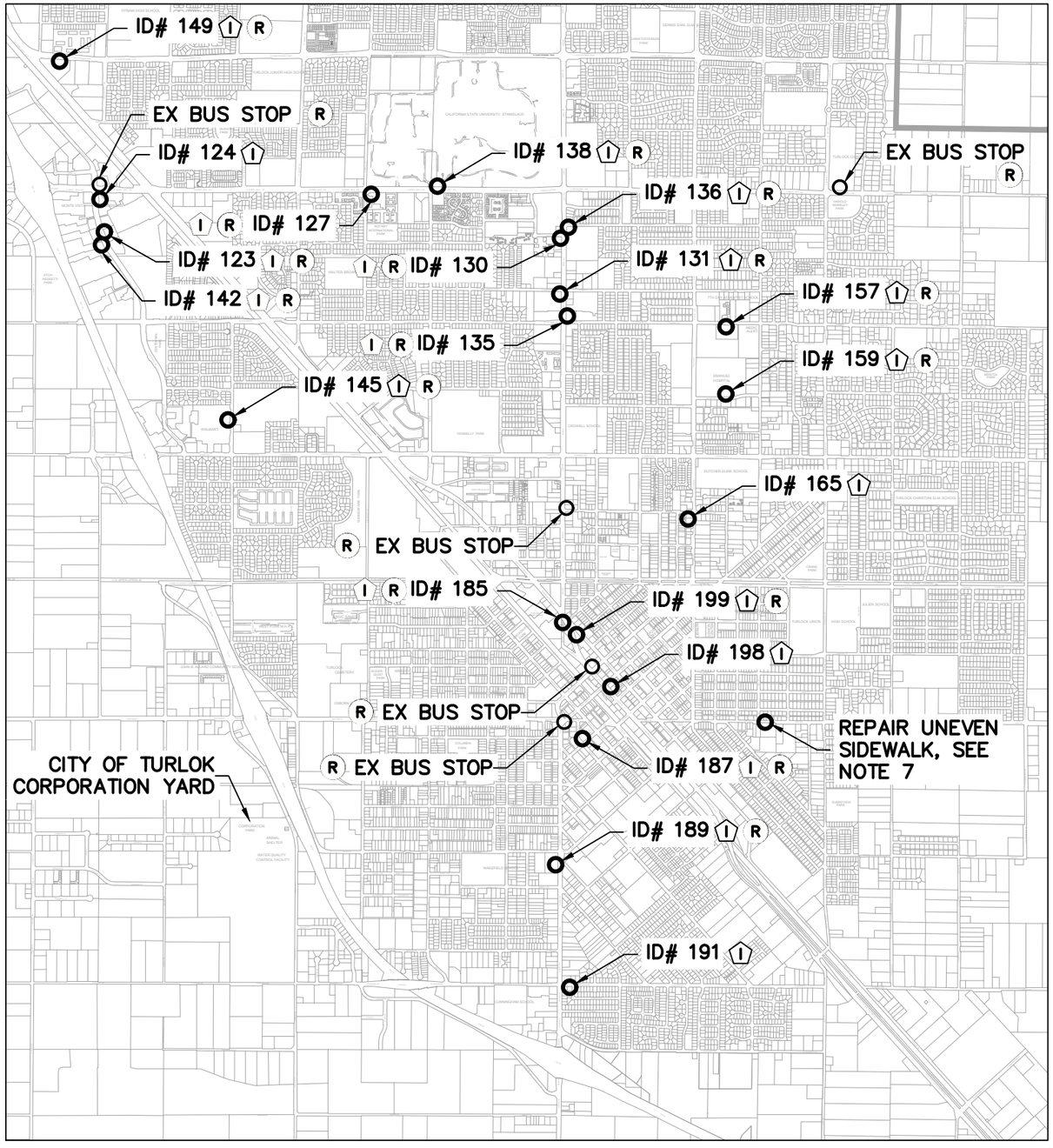

ID #	LOCATION	I INSTALL SHELTER WITH 24 x 36 CASE	I INSTALL SHELTER WITH 30 x 36 CASE	R REMOVE EXISTING SHELTER	R REMOVE EXISTING SOLAR	R REMOVE EXISTING BENCH	R REMOVE EXISTING TRASH CAN
123	COUNTRYSIDE & MONTE VISTA CROSSING	X	X (2)	X	X	X	
124	COUNTRYSIDE & MONTE VISTA	X	X				
127	MONTE VISTA & CROWELL	X	X (2)			X	
130	GEER & REGIS	X	X	X		X	X
131	GEER & MINNESOTA	X	X (2)	X	X	X	X
135	GEER & TUOLUMNE	X	X	X		X	
136	GEER & REGIS	X	X	X		X	X
138	MONTE VISTA & DELS	X	X	X		X	X
142	COUNTRYSIDE & MONTE VISTA CROSSING	X	X	X		X	
145	TULLY & FULKERTH	X	X	X		X	X
149	CHRISTOFFERSEN & GOLDEN STATE	X	X	X		X	
157	TUOLUMNE AT ECC	X	X			X	
159	DELBON AT EMC	X	X	X		X	X
165	OLIVE & WAYSIDE	X	X (2)				
185	GOLDEN STATE & GEER	X	X (2)	X		X	
187	A STREET & THIRD ST. (CITY HALL)	X	X (2)	X	X	X	
189	LANDER & SOUTH	X	X	X		X	
191	LINWOOD & LANDER	X	X				
198	GOLDEN STATE & MAIN	X	X				
199	GOLDEN STATE & CENTER	X	X (2)	X	X	X	X
	GOLDEN STATE & OLIVE (NE CORNER)			X		X	X
	MONTE VISTA & COUNTRYSIDE (NE CORNER)			X			
	GEER & WAYSIDE (NE CORNER)			X			
	LANDER & MAIN (SE CORNER)			X			X
	MONTE VISTA & BERKELEY (WEST BOUND CORNER)			X			

NOTES:

1. *NEW 13'x5' TOLAR BUS SHELTERS SHALL BE PROVIDED BY THE CITY AND INSTALLED BY THE CONTRACTOR. ALL BUS SHELTERS SHALL BE INSTALLED IN ACCORDANCE WITH THE MANUFACTURER'S INSTRUCTIONS.*
2. *CONTRACTOR SHALL COLLECT THE SHELTERS FROM THE CITY OF TURLOCK CORP YARD, 701 WALNUT ROAD AND ASSEMBLE THE EQUIPMENT AT THE ROGER K. FALLS TRANSIT CENTER, 1418 N. GOLDEN STATE BLVD, PRIOR TO DELIVERY AND INSTALLATION.*
3. *NEW SHELTERS AND EQUIPMENT SHALL BE INSTALLED IN SAME LOCATION AS THE REPLACED EXISTING EQUIPMENT. FOR NEW BUS STOP LOCATIONS (WITHOUT ANY EXISTING EQUIPMENT), CITY STAFF WILL IDENTIFY THE EXACT INSTALLATION LOCATIONS.*
4. *CONTRACTOR SHALL BE RESPONSIBLE FOR REMOVAL AND DISPOSAL OF ALL MATERIALS, THE COST OF WHICH SHALL BE INCLUDED IN THE PROPOSED COST:*
   - *EXISTING BENCHES AND TRASH CANS SHALL BE SALVAGED AND DELIVERED TO THE CITY OF TURLOCK CORP YARD. CONTRACTOR SHALL COORDINATE THE DELIVERY OF ITEMS WITH CITY STAFF A MINIMUM 48 HOURS PRIOR.*
   - *EXISTING SHELTERS AND SOLAR PANELS SHALL BE REMOVED AND PROPERLY DISPOSED OF BY THE CONTRACTOR.*
5. *CONTRACTOR SHALL BE RESPONSIBLE TO PRESERVE OR REPLACE THE SURROUNDING SITE CONDITIONS AND UTILITIES. CONTRACTOR SHALL VERIFY THE LOCATIONS OF THE EXISTING UTILITIES POTENTIALLY AFFECTED BY CONSTRUCTION PRIOR TO CONSTRUCTION.*
6. *INTERRUPTIONS TO CITY TRANSIT OPERATIONS SHALL BE KEPT TO A MINIMUM:*
   - *NO TWO ADJACENT BUS STOPS SHALL BE UNDER CONSTRUCTION AT THE SAME TIME.*
   - *NEW EQUIPMENT SHALL BE INSTALLED IMMEDIATELY AFTER THE EXISTING EQUIPMENT HAS BEEN REMOVED. EQUIPMENT REMOVAL AND INSTALLATION ON SEPARATE DAYS IS NOT PERMITTED.*
7. *ELIMINATE TRIP HAZARDS AT THE EXISTING CONCRETE SIDEWALK AND RESIDENTIAL DRIVEWAY APPROACH NEAR THE PROPERTY BOUNDARY OF 1400 AND 1470 EAST AVENUE. CONTRACTOR SHALL SAW CUT UNEVEN CONCRETE USING A PRECISION BLADE, LEAVING A SMOOTH UNIFORM SURFACE. CONCRETE GRINDING IS NOT PERMITTED*

USA NORTH 811 Call 811 Before You Dig

NOTE: NO SURVEY MEASUREMENTS WERE TAKEN. CONTRACTOR SHALL BE RESPONSIBLE TO DETERMINE ALL DIMENSIONS ON THE SITE. ANY DISCREPANCY SHALL BE BROUGHT TO NOTICE OF THE ENGINEER PRIOR TO THE COMMENCEMENT OF ANY WORK.

CITY OF TURLOCK
DEVELOPMENT SERVICES
ENGINEERING DIVISION
156 S. BROADWAY, STE 150
(209) 668-5520

BUS STOP LOCATIONS
15-76
BUS STOP IMPROVEMENTS, PHASE 1

DRAWN BY:	AJH
REV. BY:	---
CH. BY:	SMF
DATE:	OCT 2020
SCALE:	NONE
DWG NAME	

SHEET 01 OF 01

THIS DRAWING HAS BEEN GENERATED AND IS MAINTAINED BY A CAD SYSTEM. CHANGES SHALL ONLY BE INCORPORATED AS DIRECTED BY TOLAR MANUFACTURING CO., INC.'S ENGINEERING DEPT

REVISIONS				
ZONE	REV	DESCRIPTION	DATE	APPROVED

GENERAL NOTES:

1. ALL STRUCTURAL STEEL, UNLESS OTHERWISE NOTED, SHALL BE ASTM A-36, MINIMUN YIELD STRENGTH 36,000 PSI.
2. ALL ALUMINUM MEMBERS, UNLESS OTHERWISE NOTED, SHALL BE OF ALLOY 6063-T5.
3. ALL HOLES TO BE DRILLED OR PUNCHED.
4. STEEL WELDING SHALL CONFORM TO AMERICAN WELDING SOCIETY STANDARD D1-1-80.
5. ALUMINUM WELDING SHALL CONFORM TO AMERICAN WELDING SOCIETY STANDARD D1. 2-97. ELECTRODES SHALL CONFORM TO AWS/SFA 5.10 CLASS ER4043.
6. ALL WELDING TO BE DONE AT TOLAR MANUFACTURING COMPANY, INC. FACILITY.

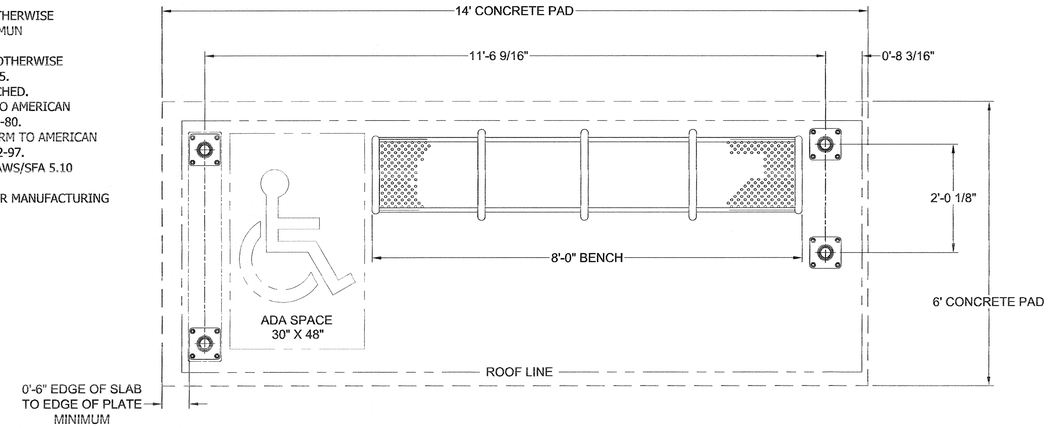

SECTION X-X
SHOE LAYOUT DETAIL

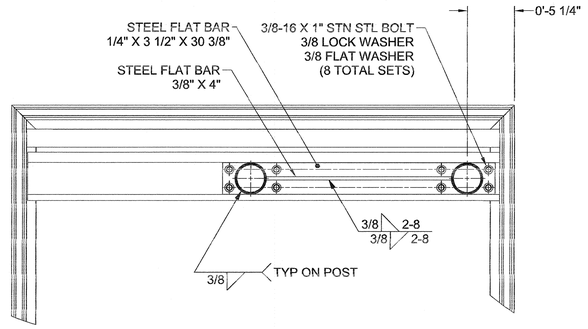

SECTION C-C
SCALE 1/8

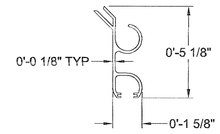

ROOF PERIMETER
ALUMINUM EXTRUSION
SCALE 1/4

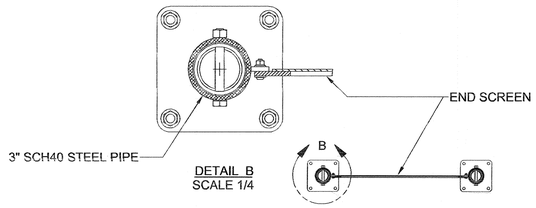

DETAIL B
SCALE 1/4

SECTION H-H
DUAL POST DETAIL

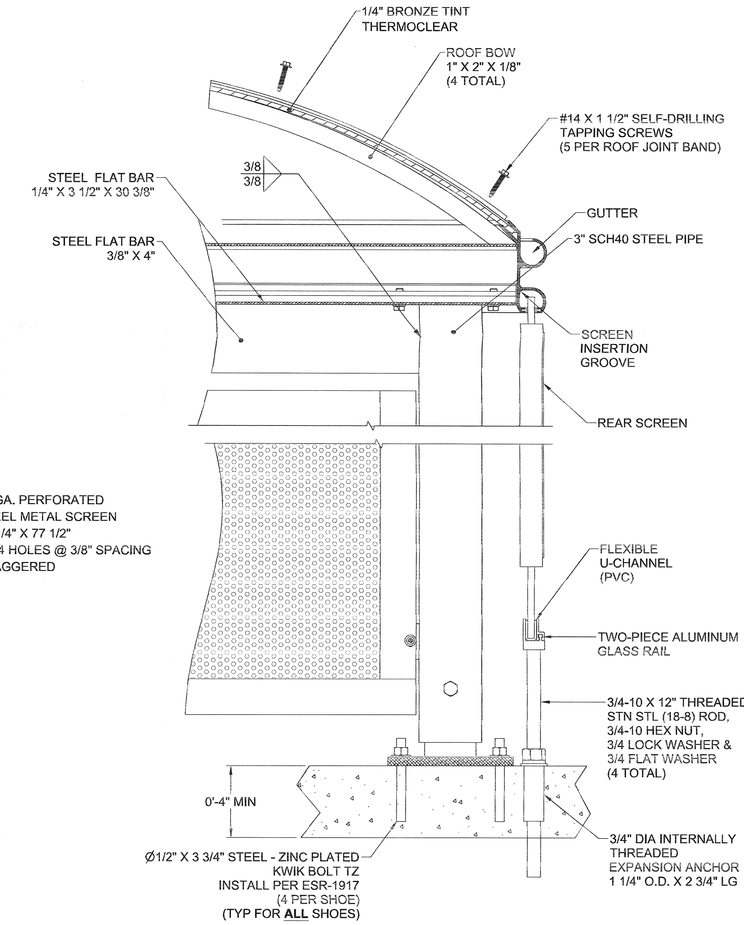

SECTION A-A
SCALE 1/4

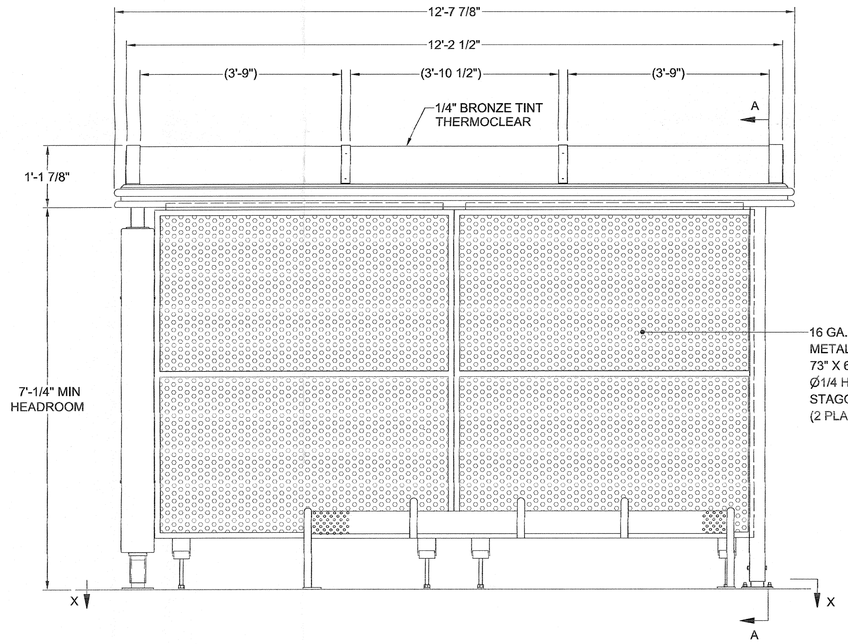

FRONT ELEVATION

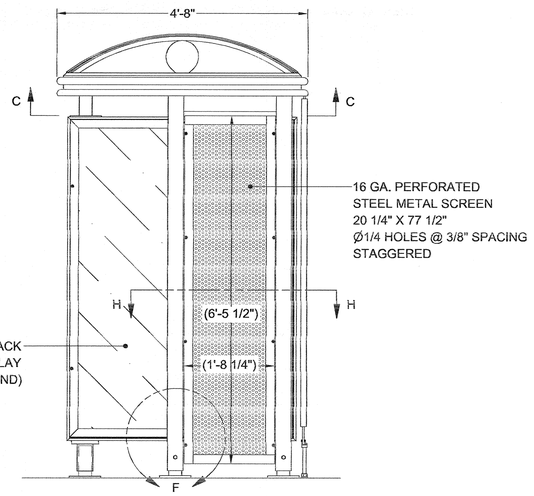

SIDE ELEVATION

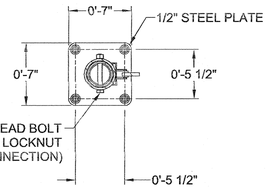

SECTION J-J
SCALE 1 / 8
(TYP PLATE FOR DUAL POST SHOE)

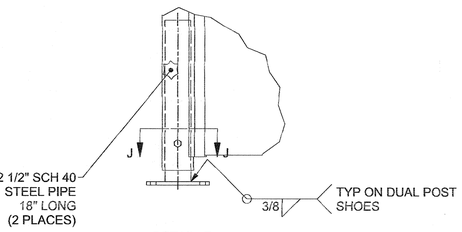

DETAIL F
SCALE 1 / 8

REGISTERED PROFESSIONAL ENGINEER
CRAIG L. HOSTETLER
C 38252
EXP. 3-31-19
CIVIL
STATE OF CALIFORNIA
8-3-17

LINLESS OTHERWISE SPECIFIED:
ALL DIMENSIONS ARE IN INCHES
TOLERANCES:
HOLES SIZE: ±1/32
X ± 1/32
X.X ± 1/16
ANGLES: ± 1°
REMOVE ALL BURRS AND BREAK SHARP EDGES 1/64 MAX.
THIRD ANGLE PROJECTION

TOLAR
INFINITELY WITH DISTINCTION
Tolar Manufacturing Company, Inc
258 Mariah Circle,Corona,CA 92879

DESCRIPTION
ELEVATION DWG 13' AD LOW DOME W/PERF

CUSTOMER/VENDOR
TURLOCK, CA

SIZE: D | MATL. | DWG NO. 14997-01 | REV –
SCALE 1/16 | DATE 09/19/11 | DRAWN BY: MH

The Information contained in this drawing is the sole property of Tolar Manufacturing Co., Inc. Any reproduction in part or as a whole without the written permission of Tolar Manufacturing Co., Inc. is prohibited.

ENGINEERING REPORT

REPORT H-17-054

FOR

TURLOCK, CA.

13'x 5' SHELTER
14997-01

OF

TOLAR MANUFACTURING
258 Mariah Circle
Corona, CA.

7/31/2017

The design calculations, bound within this report, are approved as indicated with the engineer's wet seal above.
This approval applies to bound pages only.

38256 Wild Poppy Ln. Yucaipa CA 92399 (951) 751-0728

REF: Engineering Report for:
Tolar Manufacturing Co. Inc.
258 Mariah Circle
Corona, CA 92879

07/31/17

- PROJECT and SITE

13'x 5' SHELTER
14997-01
TURLOCK, CA.

REPORT H-17-054

- DESIGN PER 2015 IBC & ASCE 7-10

- DESIGN CRITERIA

DL, Wind and Seismic Combinations
Attach to new/existing 4" concrete slab

- WEIGHT OF STRUCTURE

	Shelter			
Roof	359		Snow	0
Screen/Glas	118		Solar	0
Posts	95		Displays	125
Sum	697			
Weight of Structure:		W_S=	732	lbs.

C_s*p_f= 0 psf
p_f= 0 psf
C_s= 0.55 Fig.7-2c
ΔH= 1.14 7.02
H= 8.16
L= 12.67
W= 4.67

- SEISMIC

Based on the site value for City of Chalmette, St Bernard Parish
worst case values are: latitude= 37.505 longitude= -120.850
from USGS Seismic Design Maps, ASCE 7-10 & 2016 CBC, for Site Class D
and Risk Category II

S_S= 0.859 g S_{MS}= 0.994 g S_{DS}= 0.662 g
S_1= 0.322 g S_{M1}= 0.565 g S_{D1}= 0.377 g

C_s= $S_{DS}/(R/I_e)$ with ≤ C_s= $S_{D1}/(TR/I_e)$ for T≤ T_L
~~≤ C_s= $S_{D1}/(T2R/I_e)$ for T>T_L~~
> C_s= $.044S_{DS}I_e$ ≥ .01
~~< C_s= $.5S_1/(R/I_e)$ if S_1≥ 19.32~~

I_e= 1.0 Table 1.5-2 T=T_a= C_t*h^x= 0.150
C_t= 0.028 h= 8.16 ft x= 0.8
T= 0.150 ≤ T_L= 12 R= 1.5 ρ= 1.3
C_s: $S_{DS}/(R/I_e)$= 0.441 ≤ $S_{D1}/(TR/I_e)$= 1.675 ok
and ≥ $.044S_{DS}I_e$= 0.029 ok
V_S=C_S*W*ρ = 420 lbs E=$.2S_{DS}D + \Omega Q_E$ = 4.49 psf

- WIND Chapter 29

Risk Category: II H= 8.16 < 60' V= 110 mph

slope/θ: 5.5/12 28.41° K_d= 0.85 K_{zt}= 1.0

Exposure C α= 9.5 z_g= 900 z= 8.16 < 15ft

$W=q_z=.00256 * K_z * K_{zt} * K_d * V^2$ = 22.35 psf $K_z = 2.01 * (15/z_g)^{2/\alpha}$ = 0.8

- LOADS

D= 12.37 psf W= 22.35 psf E= 4.49 psf

D+.6W= 25.78 psf ** .6D+.6W= 20.83 psf

D+.7E= 15.51 psf .6D+.7E= 10.56 psf

** = governs

- FORCE F= Load * G * C_f * A_f = 30.7 * A_f G= 0.85 C_f= 1.4

- LATERAL LOAD

F_{roof} =	30.7	* A_f =	30.3*.76'*12.67' =	336	# @	7.78	ft
$F_{display/screen}$ =	30.7	* A_f =	30.3*6.08'*14.17'=	2644	# @	3.98	ft
F_{posts} =	30.7	* A_f =	30.3*4*7.02'*.292'=	251	# @	3.51	ft

- VERTICAL LOAD

$F_{roof\ up}$ =	30.7	* A_f =	40.6*13'*6' =	1815	# @	center
F_{down} =				732	# @	center

- REACTIONS

OTM=(336*7.78)+(2644*3.98)+(251*3.51)+(1815*2.34)-(732*2.34)= 16547 # - '

R= ± OTM /w + (W-Fru) = 7190 # 1798 # per leg

-9357 # Uplift -2339 # per leg

V= ΣF = 3231 # 808 # per leg

w= 2.00 ft width of sidewall

- ANCHORAGE TO CONCRETE 1/2"Φ x 3 3/4" Hilti TZ CS, 2" min embedment, 4" slab *

T_b= 585 # per Bolt

V_b= 202 # per Bolt

w/Al plate $M_O = (T_b*P_w/2)+(V_b*P_d)$ = 8288 "-#

$M_R = 2*((P_w/2)*V_{ss})+(((P_w/2)+P_c)*V_{ss}))$= 52045 "-#

$M_O < M_R$ OK

$M_R - M_O$ = 3646 '-# < M_V= 8273 '-#

Allowable	Static		Seismic		Actual		
	Carbon	Stainless	Carbon	Stainless			
T_Z=	1116	1476	1065	1212	585	OK	for cracked 2,500psi concrete
V_Z =	2974	3194	2839	3049	202	OK	

* for new slabs, minimum 240 hour slab cure prior to anchor installation. See Slab/Ftg for reinforcement

- BASE PLATE

AL

T= 585 lbs/bolt

d= 2.26 in

M= T * d = 1323 # - "

S= M / (.7 * $f_{b\ stl}$) = 0.052 in^3

t= $\Gamma^3 S$= 0.378 in

P_w= Plate 7.00 in sq x 1/2"

P_c= C-C 5.50 in

Stl Tube = 2.88 in ø

$S=1/6\ b\ t^2$ Assume b=6t

Use P_d=1/2" Stl plate 0.5

- HEX-HEAD BOLT

Base

V_T= 2339 # per post

1/2" - 13 x 4" SS good for 6300 # OK

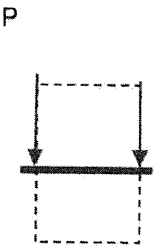

where P= 1170 #

- SLAB / FOOTING New/extg 4" Slab* PI: $W_s + p_s < R_{leg}$

Vertical Load, lbs.	PI=	1798	Soil Brg, psf	Sb=	1500
Ftg Weight, lbs.	Pw=	63	Footing Depth, in.	Fd=	4
Total Ftg. Load, lbs	Fl=	1861	Footing foot print, in.	d=	13.50
Fl=PI+Pw=	1861	lbs			
A=Fl/Sb=	1.24	sq. ft.	(Ftg area required)		
d'=sqrt(A)*12=	13.37	in.	< d= 13.5	OK	
Min standoff =		6.00	inch from edge of plate to edge of slab		

* for new slabs, minimum 240 hour slab cure prior to anchor installation and WWF6 x 6- W2.1 x W2.1 placed middle of slab and 3" edge clearance

Design Maps Summary Report

User–Specified Input

Report Title H-17-054 Mon July 31, 2017 00:18:57 UTC
Building Code Reference Document ASCE 7-10 Standard (which utilizes USGS hazard data available in 2008)
Site Coordinates 37.505°N, 120.85°W
Site Soil Classification Site Class D – "Stiff Soil"
Risk Category I/II/III

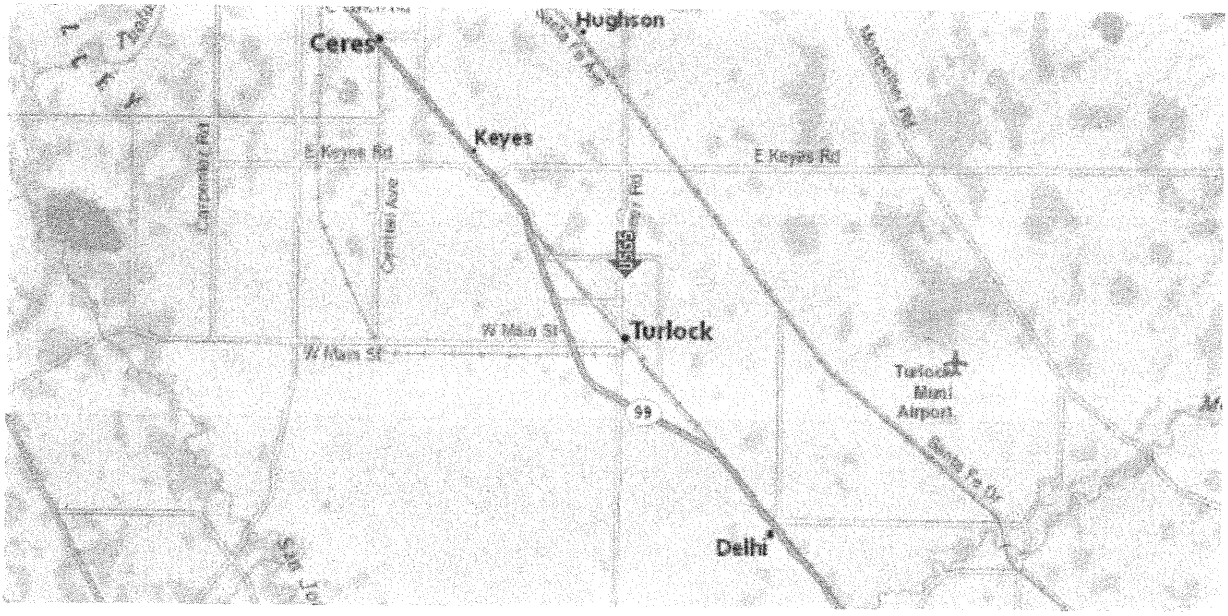

USGS–Provided Output

S_s =	0.859 g	S_{MS} =	0.994 g	S_{DS} =	0.662 g
S_1 =	0.322 g	S_{M1} =	0.565 g	S_{D1} =	0.377 g

For information on how the SS and S1 values above have been calculated from probabilistic (risk-targeted) and deterministic ground motions in the direction of maximum horizontal response, please return to the application and select the "2009 NEHRP" building code reference document.

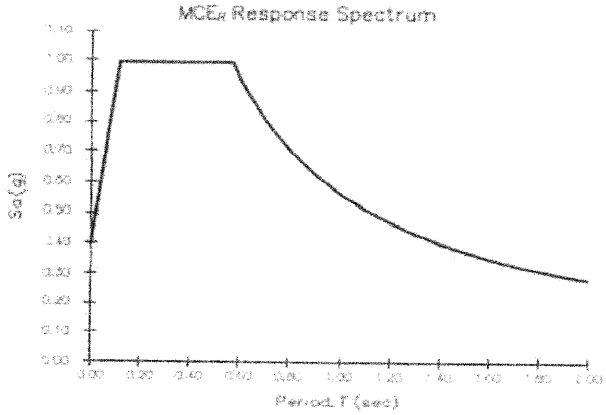

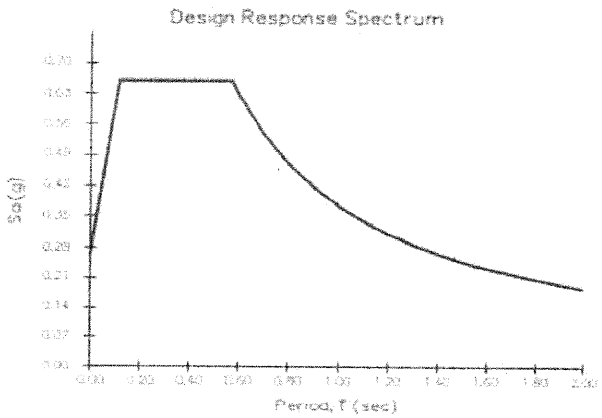

ATC Search Results

WIND

Query Date: Sun Jul 30 2017
Latitude: 37.5050
Longitude: -120.8500

ASCE 7-10 Windspeeds
(3-sec peak gust in mph*):

Risk Category I: 100
Risk Category II: 110
Risk Category III-IV: 115
MRI** 10-Year: 72
MRI** 25-Year: 79
MRI** 50-Year: 85
MRI** 100-Year: 91

ASCE 7-05 Windspeed:
85 (3-sec peak gust in mph)
ASCE 7-93 Windspeed:
70 (fastest mile in mph)

*Miles per hour

**Mean Recurrence Interval

SNOW

Query Date :July 30, 2017
Latitude :37.505
Longitude :-120.85
Elevation :107 Feet

Elevation Limitation: ASCE 7* Ground Snow Load

Elevation ≤ 1,500 feet: Ground Snow Load is 0 psf
Elevation > 1,500 and ≤ 2,000 feet: Ground Snow Load is 5 psf

All loading data is in pounds per square foot.

*Based on Figure 7-1 Ground Snow Loads printed in ASCE 7-95 through ASCE 7-10.

TOLAR

DURABILITY WITH DISTINCTION

258 MARIAH CIRCLE
CORONA, CA 92879

INSTALLATION INSTRUCTIONS

FOR
13’ BUS STOP SHELTER
WITH FLAT ADVERTISING BOX & PERF PANELS

OPTIONAL FEATURES:
BENCH, TRASH CAN, & MAP CASE

ANCHORING INSTRUCTIONS AND SPECIFICATION TABLE

4.3.5 Kwik Bolt 3 Expansion Anchor

4.3.5.3 Technical Data

Table 1 - Kwik Bolt 3 Specifications[1]

Details			Bolt Size in. (mm)	1/4 (6.4)			3/8 (9.5)			1/2 (12.7)		
d_{bit}	nominal bit diameter[2]		in.	1/4			3/8			1/2		
$h_{min}/h_{nom}/h_{deep}$	depth of embedment		in. (mm)	1-1/8 (29)	2 (51)	3 (76)	1-5/8 (41)	2-1/2 (64)	3-1/2 (89)	2-1/4 (57)	3-1/2 (89)	4-3/4 (121)
h_o	minimum/standard/deep hole depth		in. (mm)	1-3/8 (35)	2-1/4 (57)	3-1/4 (83)	2 (51)	2-7/8 (73)	3-7/8 (89)	2-3/4 (70)	4 (102)	5-1/4 (133)
d_h	wedge clearance hole in fixture		in. (mm)	5/16 (8)			7/16 (11)			9/16 (14)		
T_{inst} Recommended Installation Torque	Normal weight & Light weight Concrete	Carbon Steel HDG	ft-lb (Nm)	4 (5)			20 (27)			40 (54)		
		Stainless Steel	ft-lb (Nm)	6 (8)			20 (27)			40 (54)		
	Grout Filled Block	Carbon Steel	ft-lb (Nm)	4 (5)			15 (20)			25 (34)		
h	min. base material thickness		in.	3 inch (76 mm) or 1.3 times embedment, whichever number is greater								
Bolt Fracture Load	Carbon Steel			2900 lb[4,6]			7200 lb[4,6]			12400 lb[4]		
	HDG			no offering			no offering			12400 lb[4]		
	Stainless steel			2900 lb[4,7]			7200 lb[4,7]			12400 lb[4]		

Details			Bolt Size in. (mm)	5/8 (15.9)			3/4 (19.1)			1 (25.4)		
d_{bit}	nominal bit diameter[2]		in.	5/8			3/4			1		
$h_{min}/h_{nom}/h_{deep}$	minimum/standard/deep depth of embedment		in. (mm)	2-3/4 (70)	4 (102)	5-1/2 (140)	3-1/4 (83)	4-3/4 (121)	6-1/2[3] (165)	4-1/2 (114)	6 (152)	9 (229)
h_o	minimum/standard/deep hole depth		in. (mm)	3-3/8 (86)	4-5/8 (117)	6-1/8 (156)	4 (102)	5-1/2 (140)	6-4/5 (173)	5-1/2 (140)	7 (178)	10 (254)
d_h	wedge clearance hole in fixture		in. (mm)	11/16 (17)			13/16 (21)			1-1/8 (29)		
T_{inst} Recommended Installation Torque	Normal weight & Light weight Concrete	Carbon Steel HDG	ft-lb (Nm)	85 (115)			150 (203)			250 (339)		
		Stainless Steel	ft-lb (Nm)	85 (115)			150 (203)			235 (319)		
	Grout Filled Block	Carbon Steel	ft-lb (Nm)	65 (88)			120 (1663)			-		
h	min. base material thickness		in.	3 inch (76 mm) or 1.3 times embedment, whichever number is greater								
Bolt Fracture Load	Carbon Steel			19600 lb[4]			28700 lb[4,8]			$f_{ut} \geq 88$ ksi, $f_y \geq 75$ ksi[5]		
	HDG			19600 lb[4]			28700 lb[4]			no offering		
	Stainless steel			21900 lb[4]			$f_{ut} \geq 76$ ksi, $f_y \geq 64$ ksi[5]			$f_{ut} \geq 76$ ksi, $f_y \geq 64$ ksi[5]		

1 See Kwik Bolt 3 Product Line Table in Section 4.5.3.3 for a full list and anchor length and thread length configurations.

2 Loads for Kwik Bolt 3 are applicable for both carbide drill bits (see Section 6.4.1) and matched tolerance Hilti DD-C diamond core bits in sizes ranging from 1/2 inch to 1 inch.

3 The deep embedment depth for stainless steel Kwik Bolt 3 anchors is 6 inch (203 mm).

4 Bolt fracture loads are determined by testing in a jig as part of product quality control. These values are not intended for design purposes.

5 Bolt strength specified by minimum tensile and yield strength. Bolt fracture load not applicable.

6 Bolt fracture load not applicable to carbon steel Countersunk Kwik Bolt 3. The tensile and yield strengths are, $f_{ut} \geq 105$ ksi and $f_y \geq 90$ ksi.

7 Bolt fracture load not applicable to stainless steel Countersunk Kwik Bolt 3. The tensile and yield strengths are, $f_{ut} \geq 90$ ksi and $f_y \geq 76$ ksi.

8 For 3/4 x 12, $f_{ut} \geq 88$ ksi and $f_y \geq 75$ ksi. Bolt fracture load not applicable.

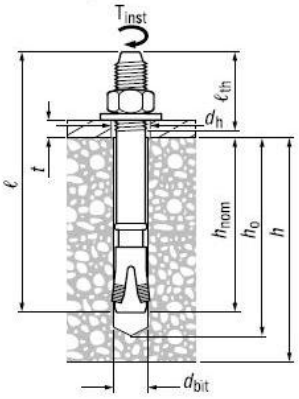

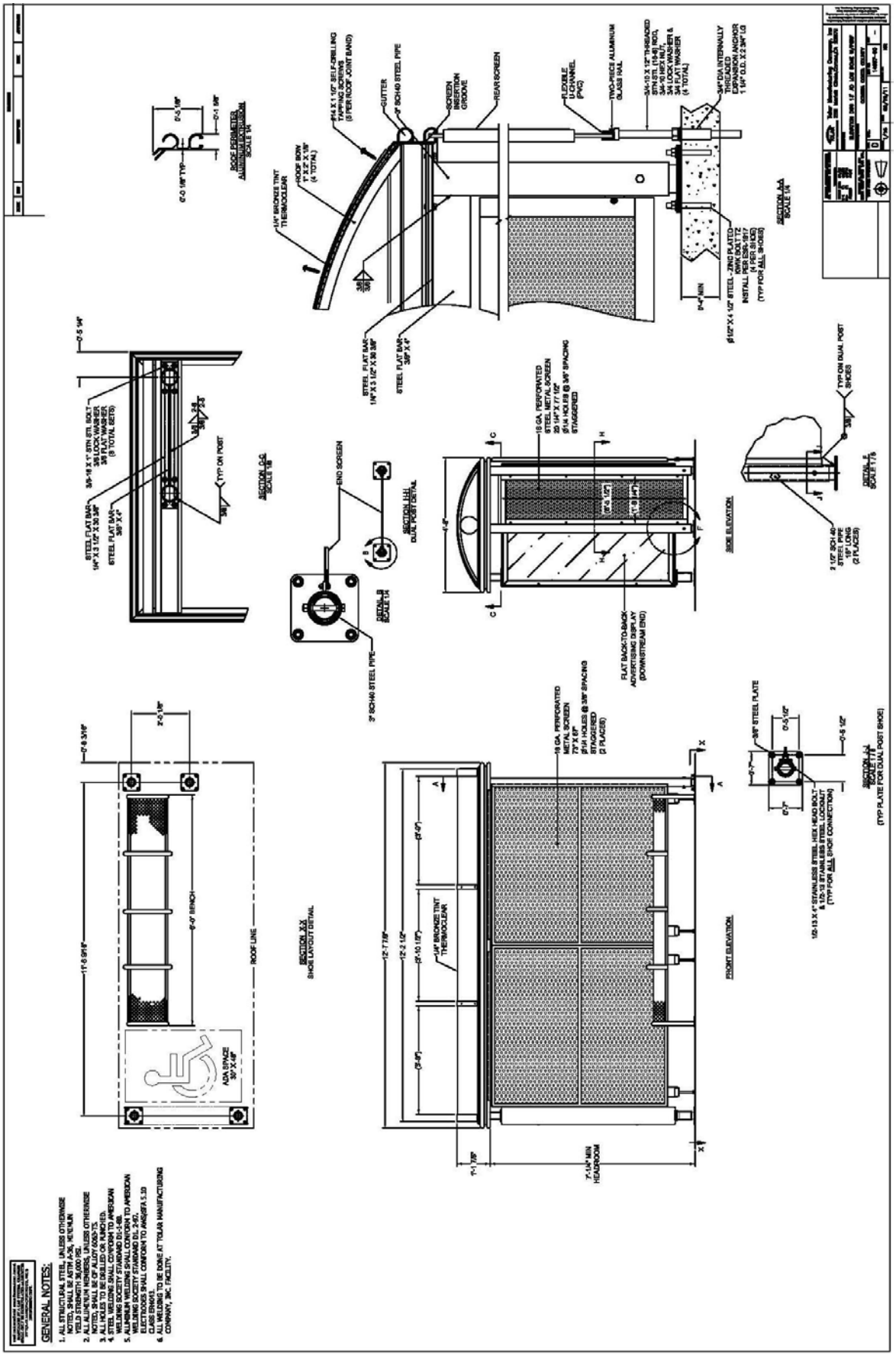
GENERAL NOTES:
1. ALL STRUCTURAL STEEL, UNLESS OTHERWISE NOTED, SHALL BE ASTM A-36, MINIMUM YIELD STRENGTH 36,000 PSI.
2. ALL ALUMINUM MEMBERS, UNLESS OTHERWISE NOTED, SHALL BE OF ALLOY 6063-T5.
3. ALL HOLES TO BE DRILLED OR PUNCHED.
4. STEEL WELDING SHALL CONFORM TO AMERICAN WELDING SOCIETY STANDARD D1-1-88.
5. ALUMINUM WELDING SHALL CONFORM TO AMERICAN WELDING SOCIETY STANDARD D1-2-92.
ELECTRODES SHALL CONFORM TO AWS/ASTM 5.10 CLASS ER4043.
6. ALL WELDING TO BE DONE AT TOLAR MANUFACTURING COMPANY, INC. FACILITY.
SECTION X-X
SHOE LAYOUT DETAIL
ROOF LINE
ADA SPACE
30" X 48"
6'-0" BENCH
11'-6 9/16"
2'-0 1/8"
SECTION C-C
SCALE 1/8
STEEL FLAT BAR
1/4" X 3 1/2" X 30 3/8"
STEEL FLAT BAR
3/8" X 4"
3/8-16 X 1" STN STL BOLT
3/8 LOCK WASHER
3/8 FLAT WASHER
(8 TOTAL SETS)
TYP ON POST
SECTION H-H
DUAL POST DETAIL
END SCREEN
DETAIL B
SCALE 1/4
3" SCH40 STEEL PIPE
SIDE ELEVATION
FLAT BACK-TO-BACK
ADVERTISING DISPLAY
(DOWNSTREAM END)
18 GA. PERFORATED
STEEL METAL SCREEN
20 1/4" X 77 1/2"
Ø1/4 HOLES @ 3/8" SPACING
STAGGERED
TYP ON DUAL POST
SHOES
DETAIL E
SCALE 1/8
2 1/2" SCH 40
STEEL PIPE
16" LONG
(2 PLACES)
FRONT ELEVATION
1/4" BRONZE TINT
THERMOCLEAR
18 GA. PERFORATED
METAL SCREEN
73" X 67"
Ø1/4 HOLES @ 3/8" SPACING
STAGGERED
(2 PLACES)
7'-1 1/8"
7'-1/4" MIN
HEADROOM
3/8" STEEL PLATE
SECTION J-J
SCALE 1/8
(TYP PLATE FOR DUAL POST SHOE)
1/2-13 X 4" STAINLESS STEEL HEX HEAD BOLT
& 1/2-13 STAINLESS STEEL LOCKNUT
(TYP FOR ALL SHOE CONNECTION)
ROOF PERIMETER
ALUMINUM EXTRUSION
SCALE 1/4
1/4" BRONZE TINT
THERMOCLEAR
ROOF BOW
1" X 2" X 1/8"
(4 TOTAL)
#14 X 1 1/2" SELF-DRILLING
TAPPING SCREWS
(5 PER ROOF JOINT BAND)
GUTTER
3" SCH40 STEEL PIPE
SCREEN
INSERTION
GROOVE
REAR SCREEN
FLEXIBLE
U-CHANNEL
(PVC)
TWO-PIECE ALUMINUM
GLASS RAIL
3/4-10 X 12" THREADED
STN STL (18-8) ROD,
3/4-10 HEX NUT,
3/4 LOCK WASHER &
3/4 FLAT WASHER
(4 TOTAL)
3/4" DIA INTERNALLY
THREADED
EXPANSION ANCHOR
1 1/4" O.D. X 2 3/4" LG
Ø1/2" X 4 1/2" STEEL - ZINC PLATED
KWIK BOLT TZ
INSTALL PER ESR-1917
(4 PER SHOE)
(TYP FOR ALL SHOES)
SECTION A-A
SCALE 1/4
STEEL FLAT BAR
1/4" X 3 1/2" X 30 3/8"
STEEL FLAT BAR
3/8" X 4"

ROOF PANEL INSTALLATION

1. **There is a film on both sides of the Lexan panel. Examine the panel and note which surface is to be faced externally. Remove film from both sides of Lexan panel. Install the edge into groove as shown in Fig 1 (Page 5). Press the panel over the top and into groove on opposite side. There should be a 1/2" gap between panels. Press down firmly so the panel contacts the roof bow at its top.**

2. **See Fig 2 (Page 6). Place the pressure bands with the two rubber bulb seals over the center joints. There can be a short gap at either end. Use the TEKS screws #14 x 1 1/2"(3 per bow) & #14 x 1 1/2"(2 per bow) to secure the pressure rib to the roof bow. The TEKS screw is self-drilling and tapping. A 3/8" nut driver with suitable power tool should be used.**

   PROCEDURE:

   1. **Install center screw first-be sure band is centered. Use the #14 x 1 1/2" TEKS screw.**
   2. **Install next screws down; use the #14 x 1 1/2" TEKS screws.**
   3. **Press band down and install bottom screws, use the #14 x 1 1/2" TEKS screws.**

3. **See Fig 3 (Page 7). Slip the 55" long rubber J-channel over one edge of the curved 3" wide band. This band is used at each end of the roof. The edge of the band without the J-channel will be aligned to the outer edge of the last bow and on top of the 1/4" square bead. Use 5 of the TEKS screws per each of these bands.**

   PROCEDURE:

   1. **Install center screw first-be sure band is centered. Use the #14 x 1 1/2" TEKS screw.**
   2. **Install next screws down; use the #14 x 1 1/2" TEKS screws.**
   3. **Press band down and install bottom screws, use the #14 x 1 1/2" TEKS screws.**

BEFORE REMOVING PROTECTIVE FILMS
FROM LEXAN PANEL DETERMINE WHICH
SURFACE IS TO BE EXPOSED TO THE OUTSIDE

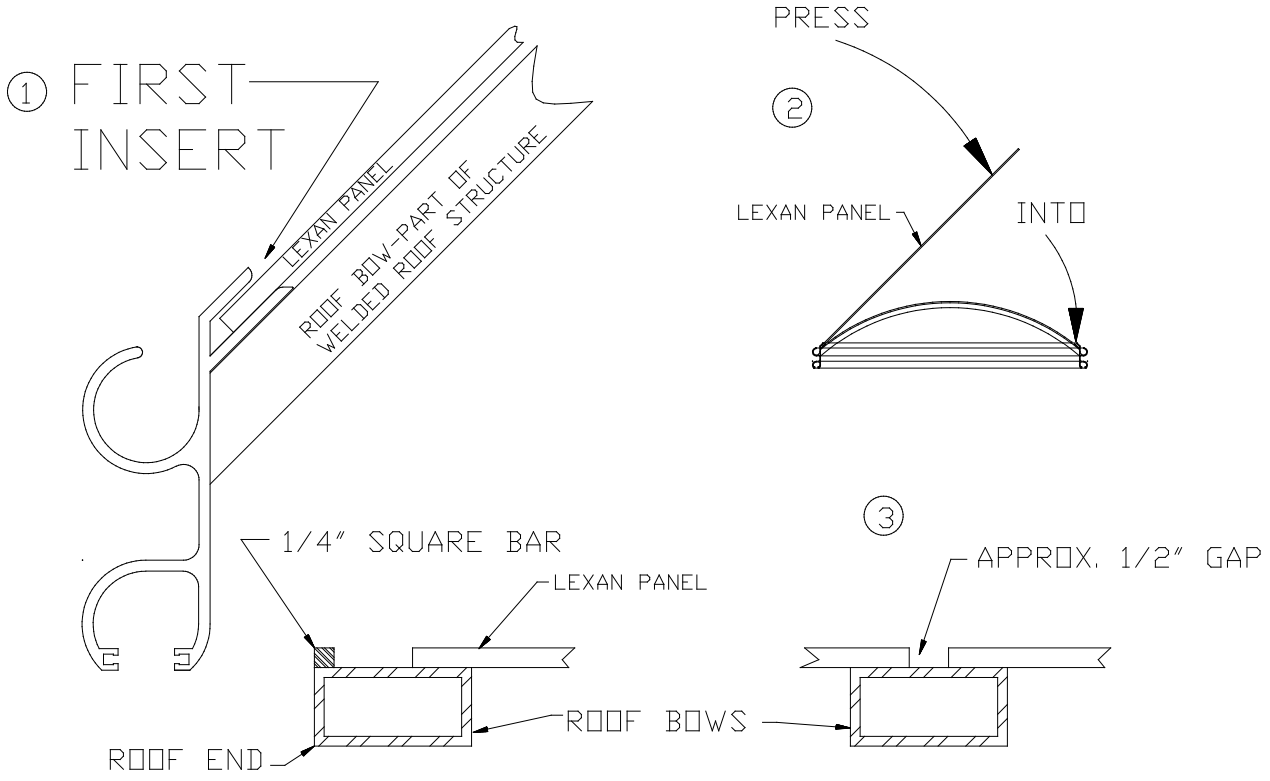

FIG 1

G:\AutoCAD2000\Installations,Plots\Fig1.dwg, Model, 02/26/2003 08:26:14 AM

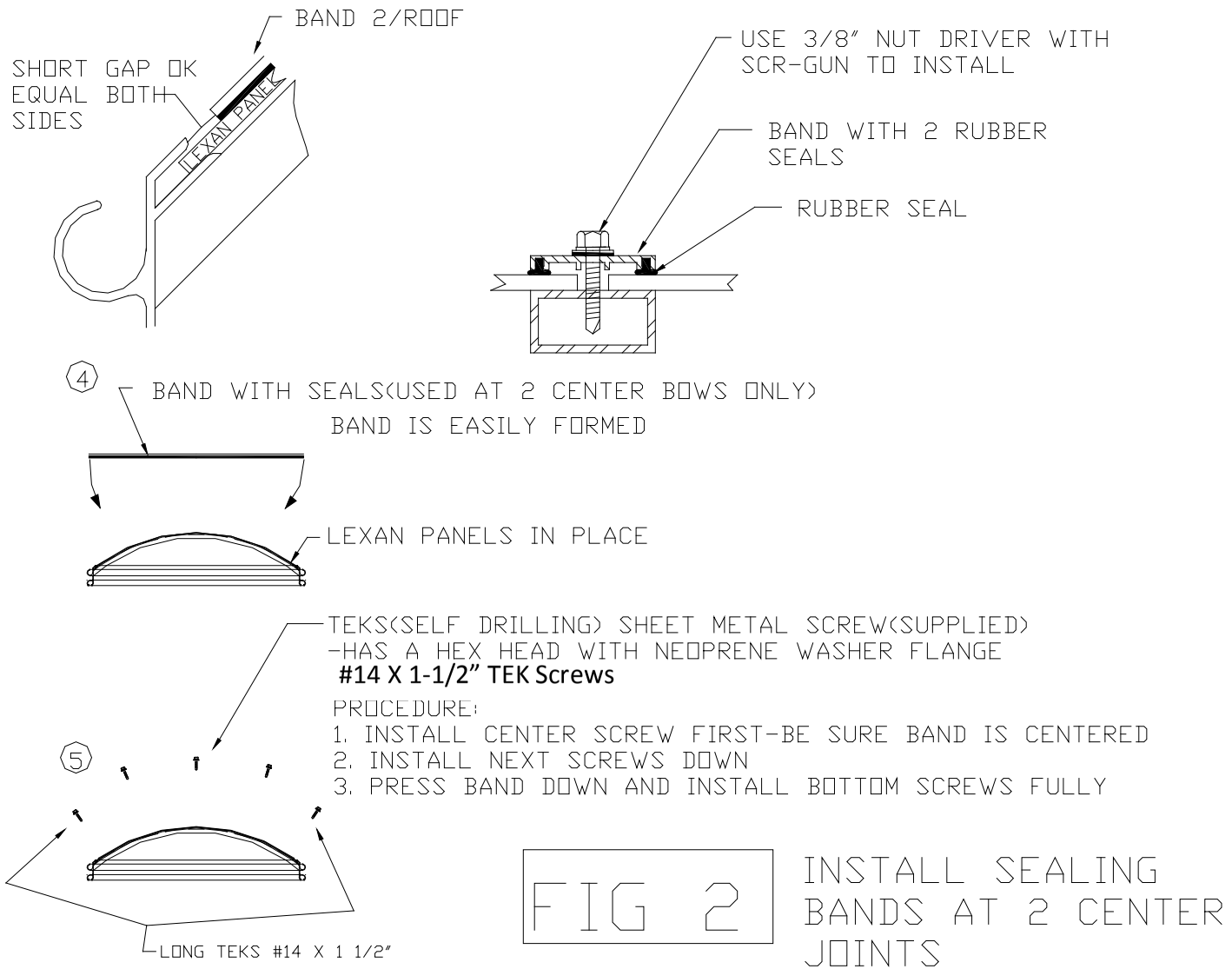

FIG 2 INSTALL SEALING BANDS AT 2 CENTER JOINTS

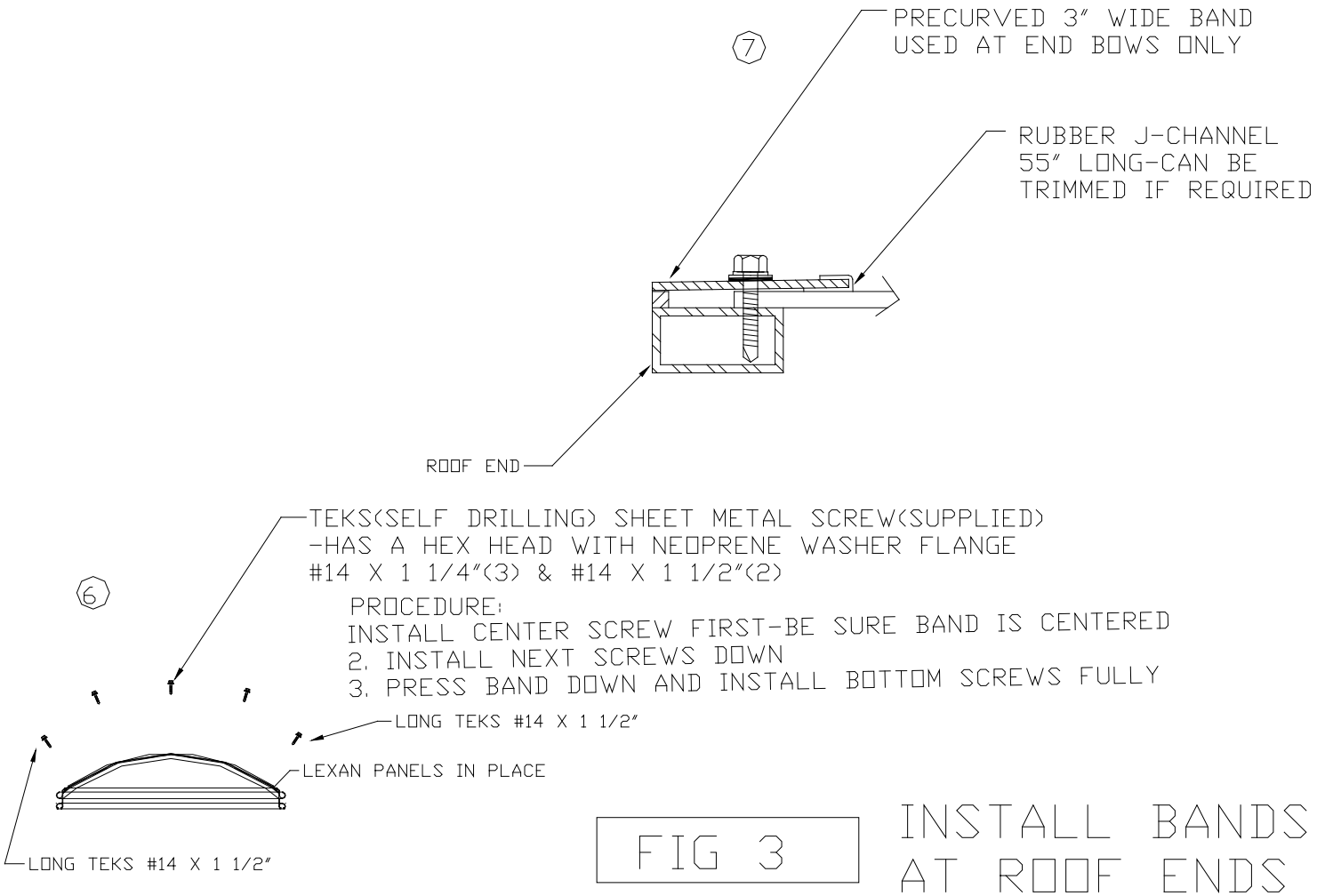

FIG 3

INSTALL BANDS AT ROOF ENDS

AD-BOX INSTALLATION

AD BOXES WITHOUT ELECTRICAL GO TO STEP 3.

NOTE: This sign is intended to be installed in accordance with the requirements of Article 600 of the National Electrical Code and/or other applicable local codes. This includes proper grounding and bonding of the sign.

1. **Open the door using the supplied tamperproof drive tip. Remove the fluorescent lamps by lifting up against the springs. Remove the bottom cover & the cover along the side below the breaker box.**

2. **Provide 120 volt 60 cycle (390 watts) electrical power under the ad box see pages 9, 10 & 11. The electrical power may be routed up through either shoe of ad box or a separate hole may be drilled in ad box bottom.**

3. **Using the Elevation drawing as a guide, place the advertising ad box at the desired location. Note: Hinges are toward the back of the shelter. Insert the shoes into the round pipe extending from bottom zof the ad box. These 2 shoes and the 2 shoes at the opposite end of the shelter can be slid up or down for height adjustment. If the grade is level, the ad box shoes should extend down approximately 8" from the ad box bottom. If the grade is higher at the opposite end of the shelter the 8" dimension must be increased accordingly.**

4. **Support and level the ad box at the desired height. The two ad box shoes have 9\16 diameter holes. Using these holes as guides, drill 1/2" diameter holes through the shoes. Install the 1/2-13 x 4" hex head bolt and 1/2-13 locking hex nut at each shoe.**

5. **Mark the concrete using the holes in the two shoes to locate the eight anchors. Move the ad box to allow drilling of the concrete. Refer to anchoring Spec Sheet for anchoring instructions.**

   <u>IMPORTANT:</u> Place shim material under a corner of the shoe if the ground is uneven. Also place shim material under a corner of the shoe if the roof has been leveled and the shoe is not flat to sidewalk. Do not torque down the anchors so that the advertising box is distorted.

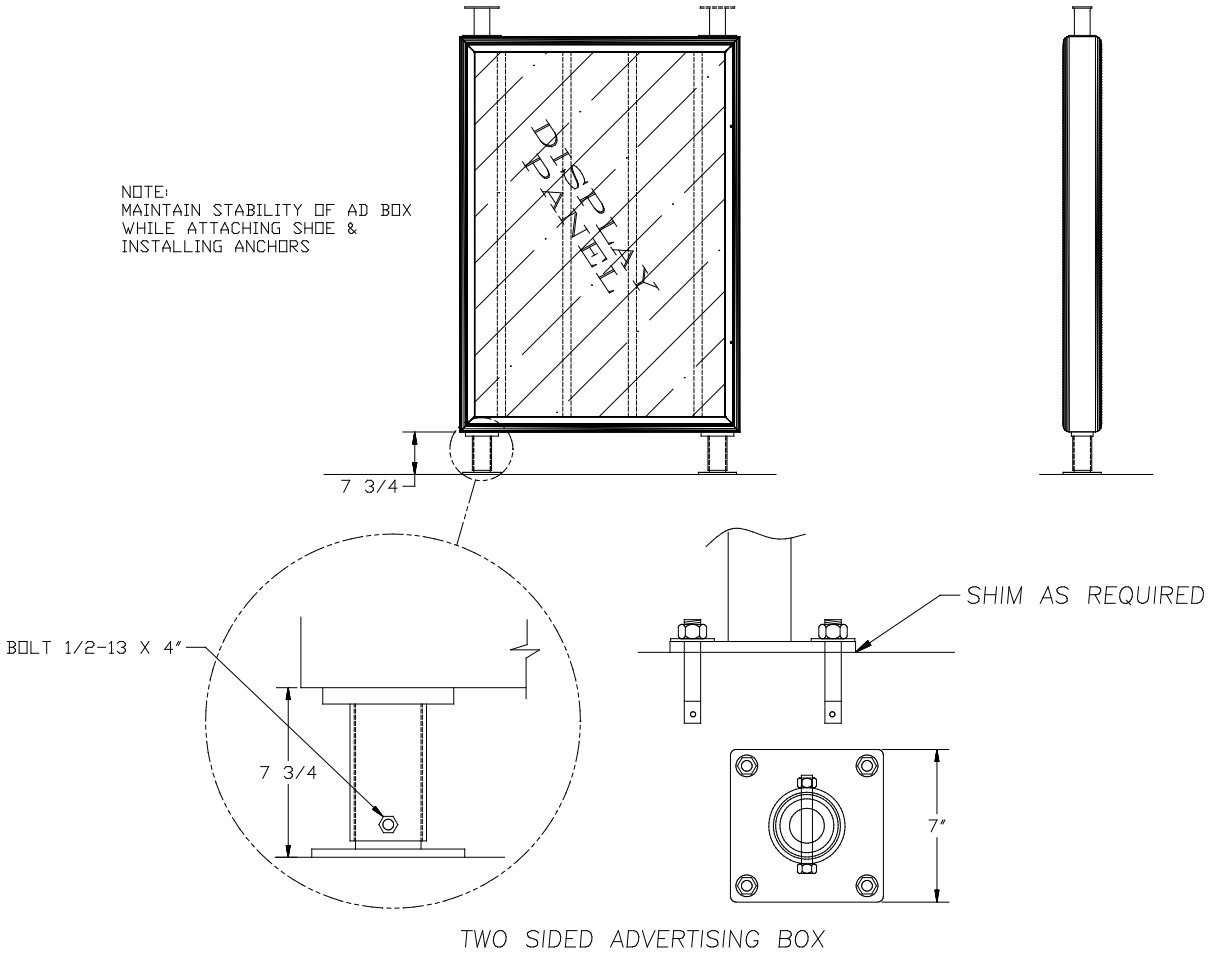

TWO SIDED ADVERTISING BOX

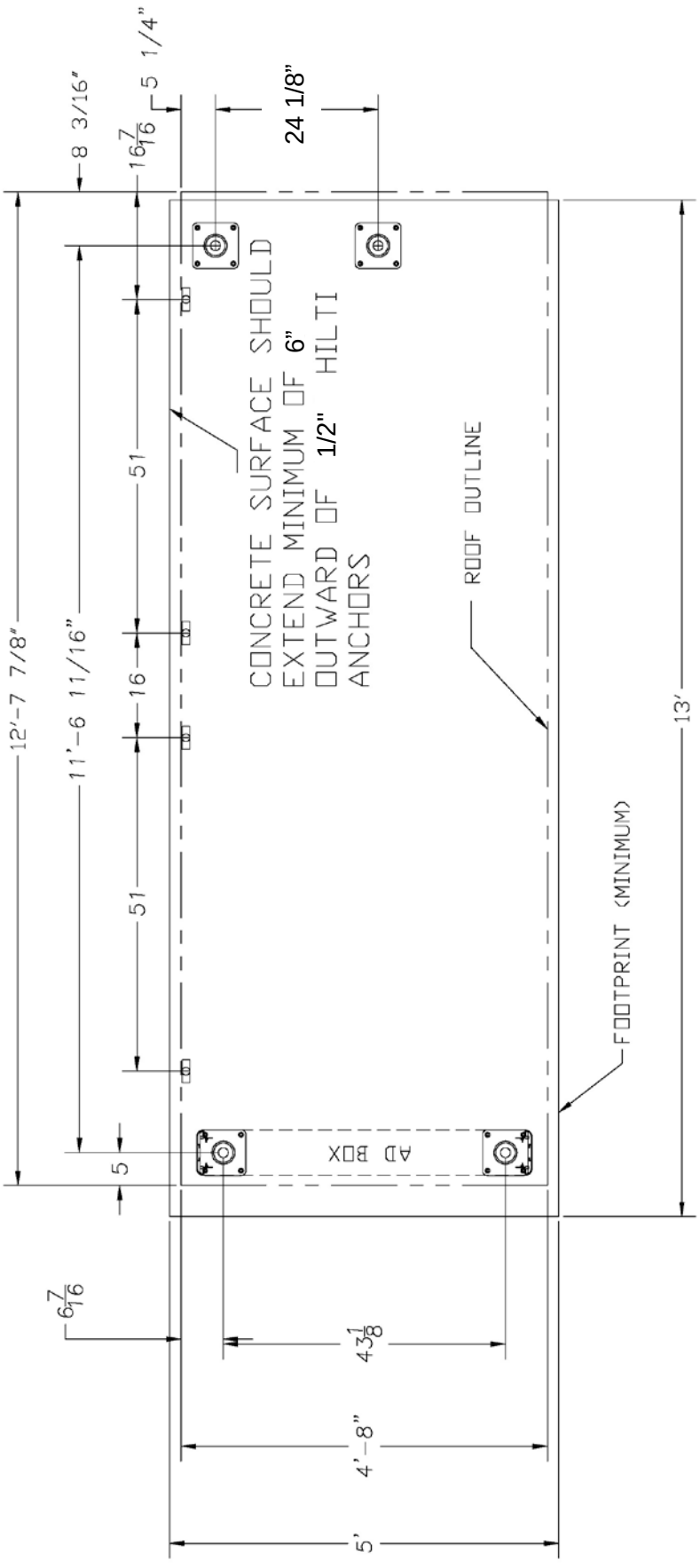

FRONT(FACING STREET)

13' SHELTER W/FLAT AD BOX

FLOOR PLAN

ROOF INSTALLATION

SEE PAGE 13

1. **Slide two shoes into the two support posts that are to be installed opposite the ad box.**

2. **Raise the roof over the ad box. Position the Dual post assembly under the crossbeam at the opposite end.**

3. **Insert and tighten 4 (four) 3/8 - 16 X 1 hex head bolts, 3/8 lock washers, and 3/8 flatwashers at the top of each post and the short pipe brackets of the ad box.**

4. **Level the roof by placing a carpenter's level on the roof's gutter on all sides then, through the 9/16" diameter holes at the bottom of each support post, drill a 1/2" diameter hole through the pipe of the shoes. It is not necessary to use the smaller 1/4" diameter holes. Some installers use a 3/4" long U-drive rivet in the small holes temporarily.**

5. **Install the 1/2 - 13 X 4 hex head bolt and 1/2 - 13 locking hex nut at each shoe.**

6. **Plumb the support posts. The dimension between the posts must be 20 5/8" inside to inside. Check this dimension at the post bottom before marking and drilling holes for the anchors. Mark hole locations and refer to anchoring specifications.**

IMPORTANT: **Place shim material under a corner of the shoe if the ground is uneven. Also place shim material under a corner of the shoe if the roof has been leveled and the shoe is not flat to sidewalk. Do not torque down the anchors so that the advertising box is distorted.**

REAR SCREEN INSTALLATION

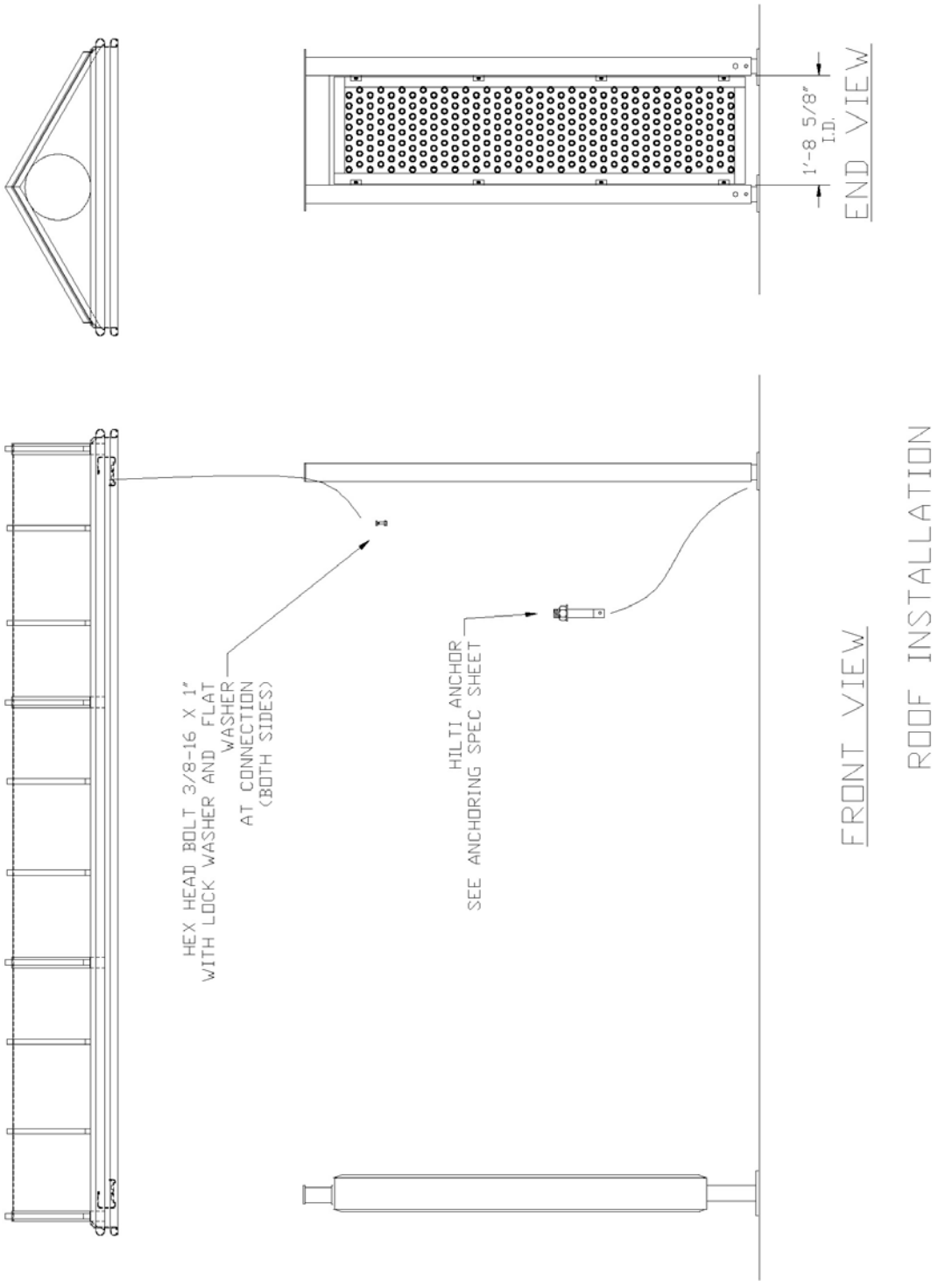

1. See page 15 and the Elevation drawing page 3. Drop a plumb line from the rear screen insertion groove of the roof perimeter. Mark the

concrete near both ends of the roof and snap a chalk line. The rear screen support/anchor assemblies will be inserted on this line. Mark the chalk line at the intervals shown on the drawings. These marks will be the proper spacing for the support/anchor assemblies. The first support/anchor assembly at either end must be at least 4" in from end of roof.

2. **Drill two (2) 1 1/4" diameter holes into the concrete on the marks with a masonry drill. These holes should be at least 8" deep and may penetrate into the grade below the concrete. This depth is required to allow clearance for the threaded adjusting rod. Clean out holes.**

3. **Place the bottom screen support/anchor assemblies into the holes. The top surface of the anchor itself should be flush to concrete or 1/2" below the total height of the screen is 79". Measure from inside the screen insertion groove to the screen support anchor. Rotate the threaded rod inside the anchor to adjust height. Tighten the 3/4-10 hexnut to expand and secure anchor. Slide screen up into screen insertion groove and onto bottom screen support/anchor assemblies (separate clip can be slid off). Replace clip.**

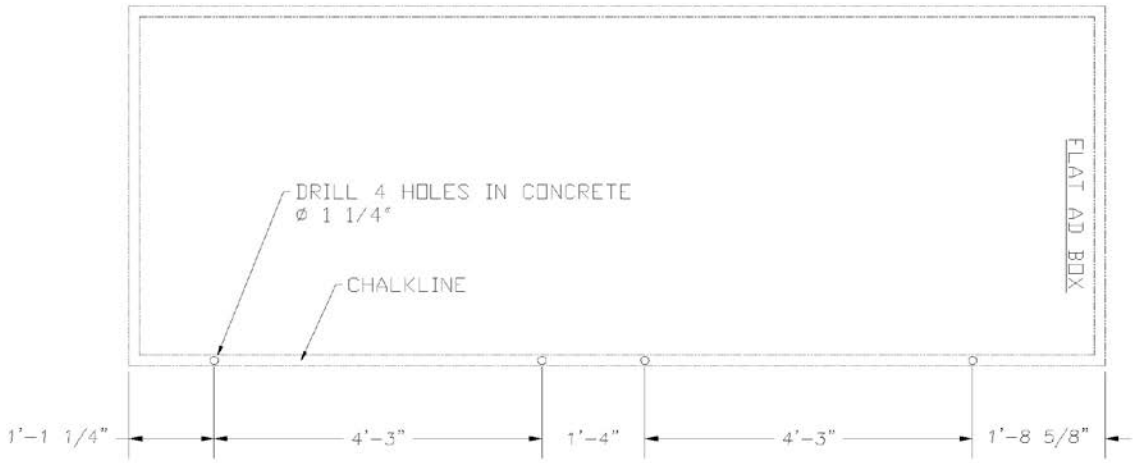

PLAN VIEW

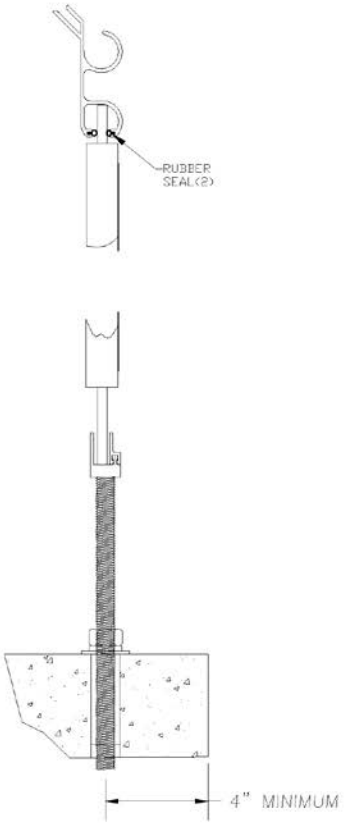

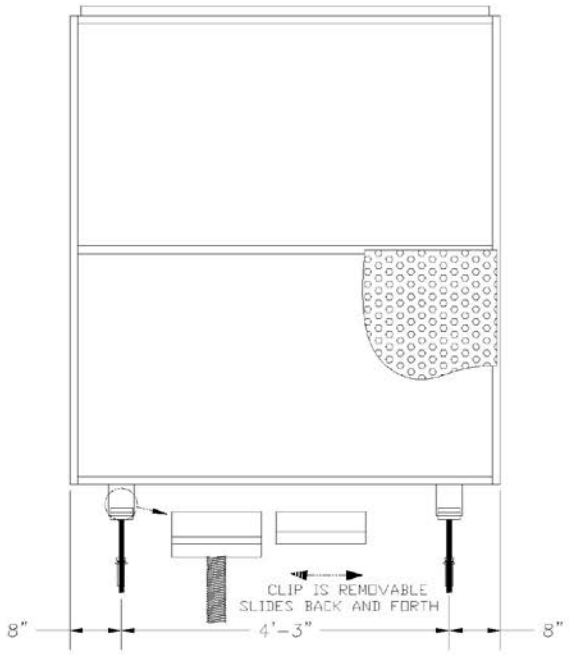

BACK VIEW

END SCREEN INSTALLATION

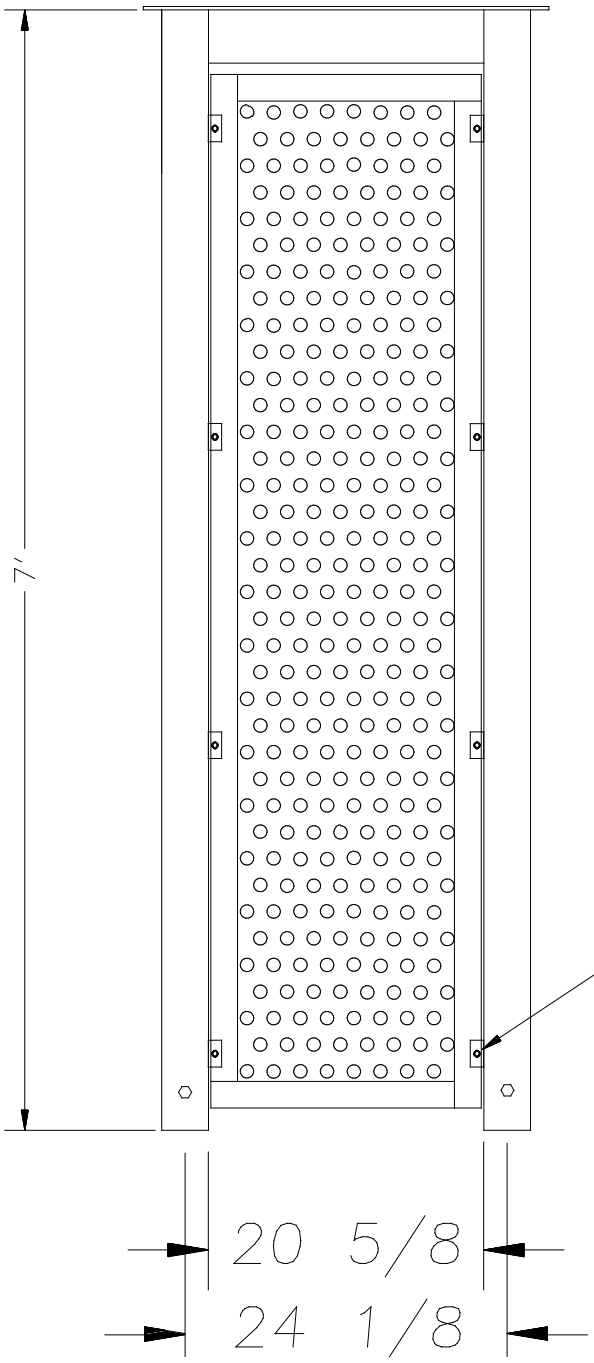

NOTES:
1. SCREEN CAN BE INSTALLED OUTSIDE OF TABS ON PIPE OR INSIDE OF TABS.
2. LOOSEN THE ANCHORS AT BOTTOM TO ALLOW FITTING OF SCREEN.
3. INSTALL THE TAMPERPROOF SCREW THROUGH THE SCREEN FRAME FIRST THEN THROUGH THE TAB.

INSTALL WITH EIGHT SCREWS 1/4-20 X 1 AND SELFLOCK NUT- USE FLATWASHER AGAINST SLOTTED HOLE.

BENCH INSTALLATION

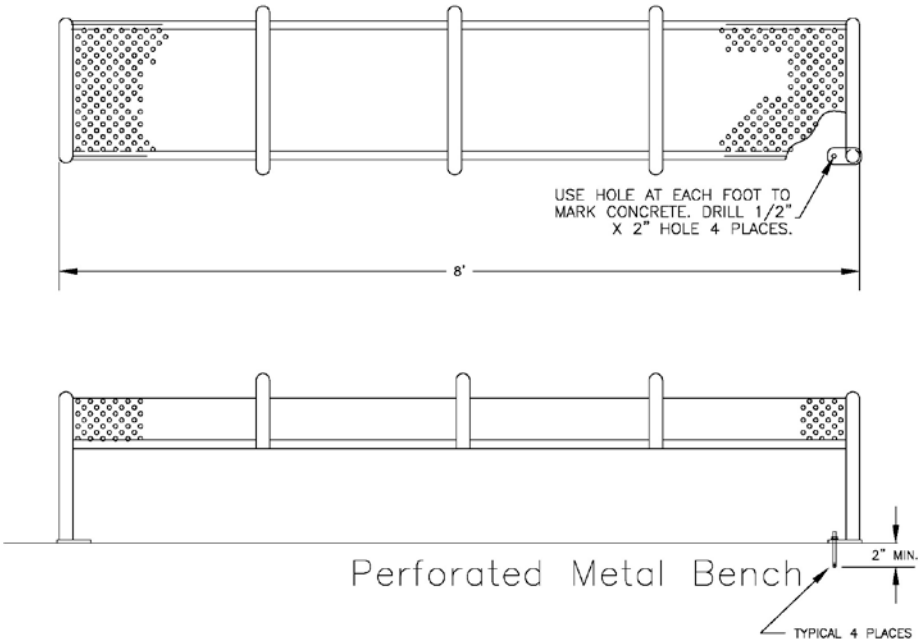

1. PLACE THE 8' BENCH INSIDE THE SHELTER. TT SHOULD BE PLACED TOWARD ONE END OF THE SHELTER TO COMPLY WITH ADA STANDARDS.
2. MARK THE CONCRETE AT EACH OF THE MOUNTING PADS AND WITH A 1/2" DIAMETER MASONRY DRILL, MAKE THE HOLES IN THE CONCRETE FOR THE BENCH
3. PLACE THE 1/2" DIAMETER ANCHORS INTO THE HOLES. SECURE THE BENCHES TO THE ANCHORS.

BENCH INSTALLATION

TRASH RECEPTACLE INSTALLATION

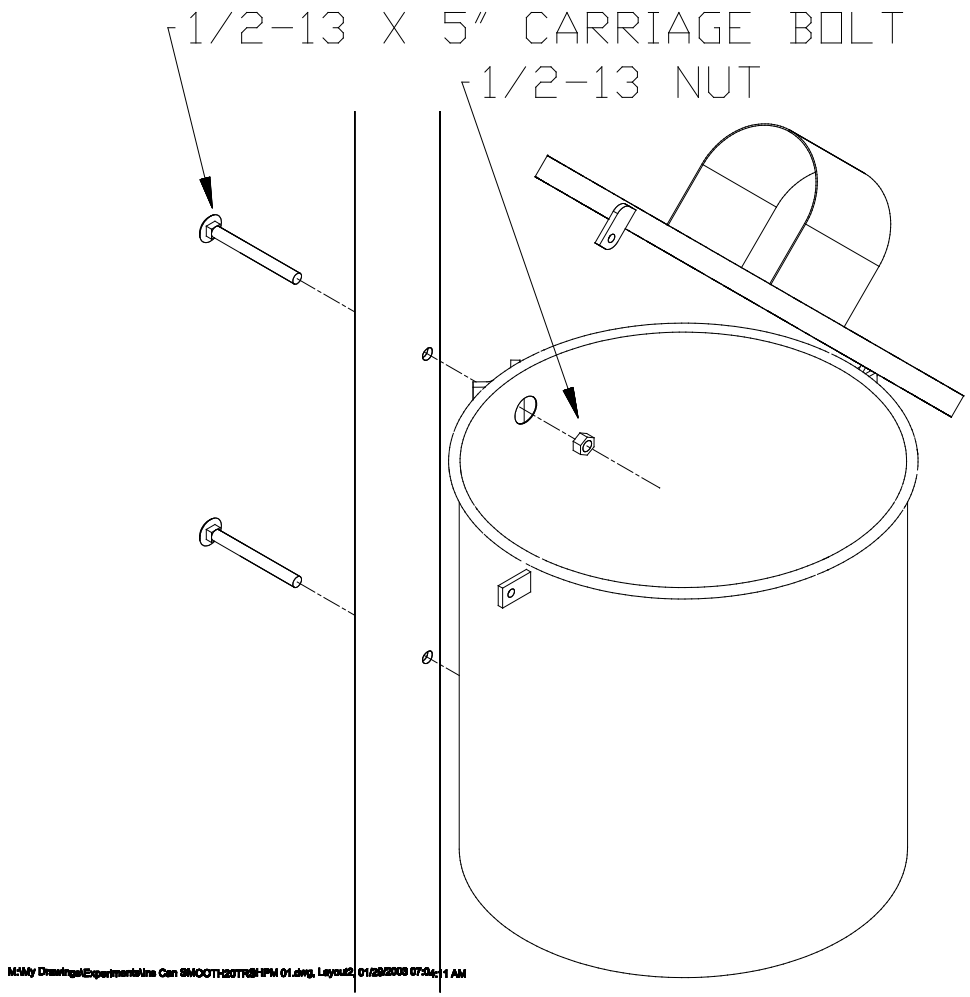

MAP CASE INSTALLATION

1. **Remove the side extrusion of the map case by removing the 2 tamperproof screws. Slide out the glass.**

2. **Place the map case and support up against the flat bar frame of the end screen or against the rear perforated panel. Either use the available holes or back-drill holes using the holes in the map case. These holes should be 5/16" diameter.**

3. **Insert the 4 machine screws from inside the map case and through the flat bar frame. Secure with the hex nuts ¼-20 nylock.**

4. **Slide poster (if available) and glass into map case. Replace the tamperproof machine screws.**

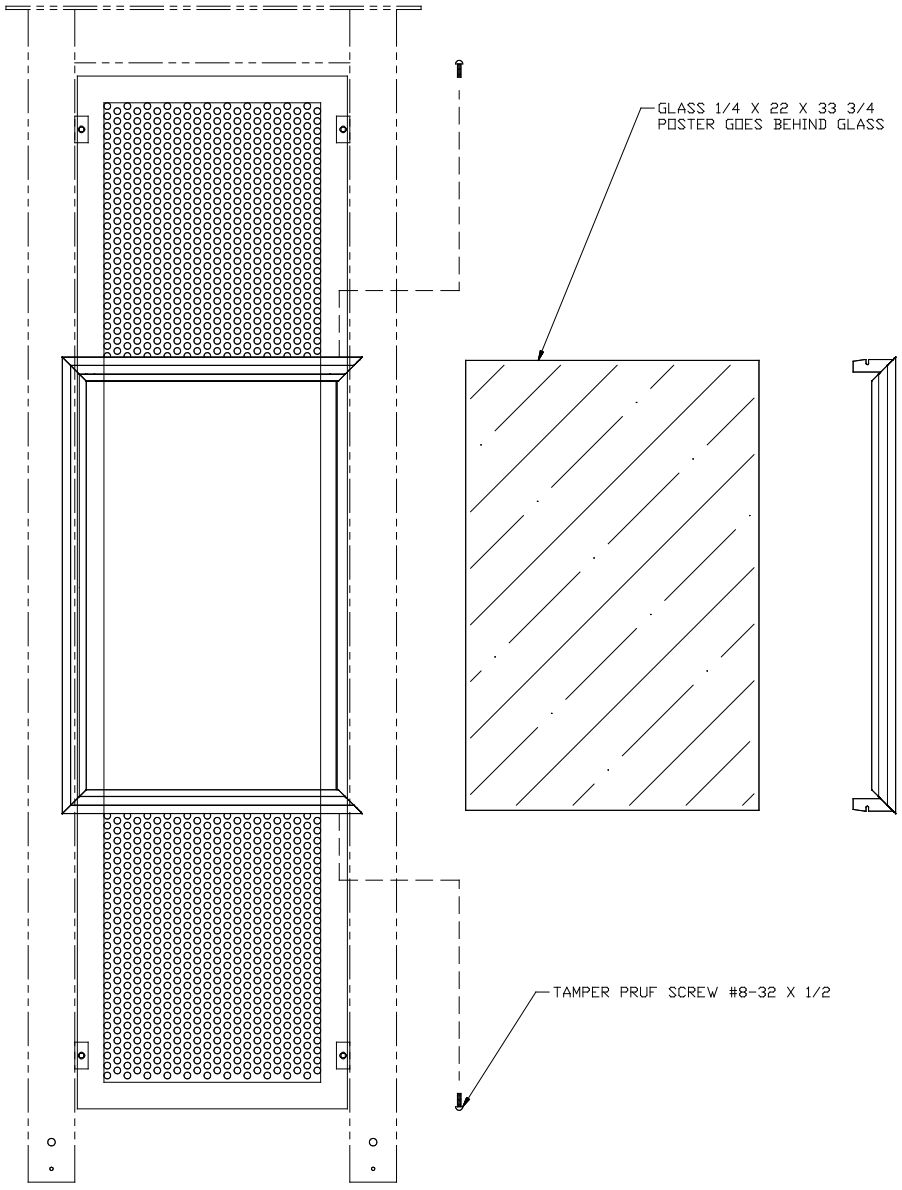
GLASS 1/4 X 22 X 33 3/4
POSTER GOES BEHIND GLASS
TAMPER PRUF SCREW #8-32 X 1/2

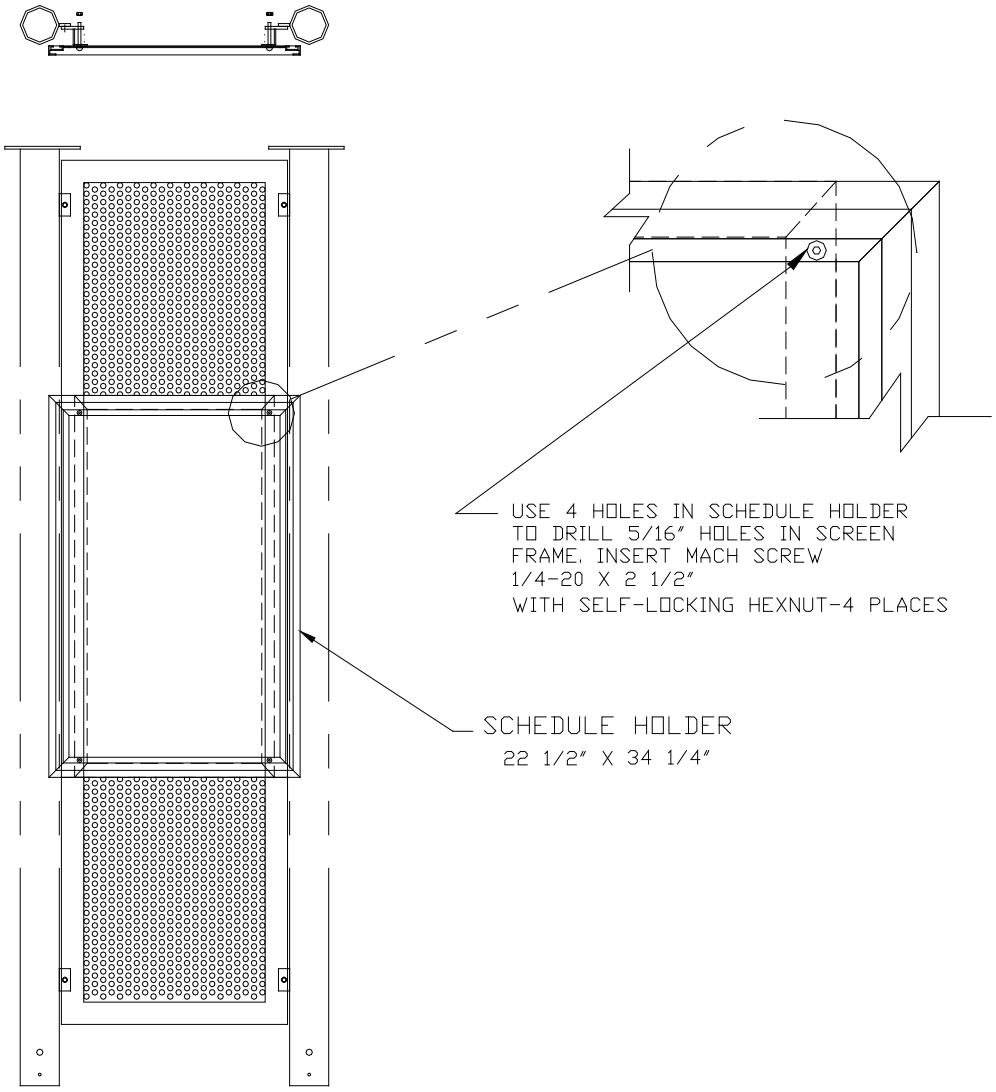
USE 4 HOLES IN SCHEDULE HOLDER
TO DRILL 5/16" HOLES IN SCREEN
FRAME. INSERT MACH SCREW
1/4-20 X 2 1/2"
WITH SELF-LOCKING HEXNUT-4 PLACES
SCHEDULE HOLDER
22 1/2" X 34 1/4"

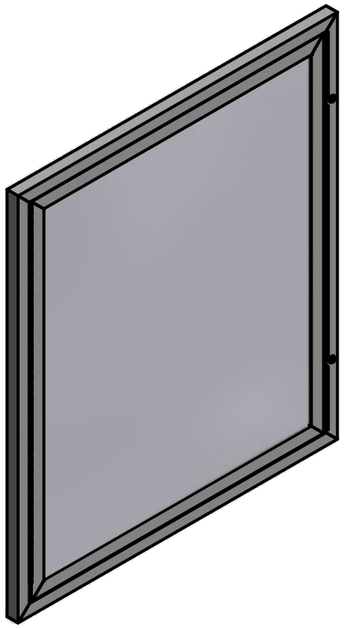

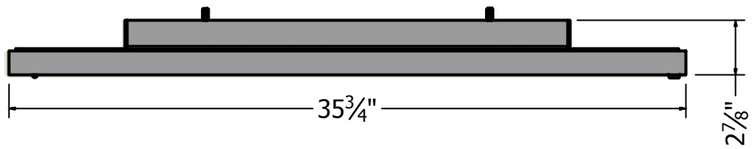

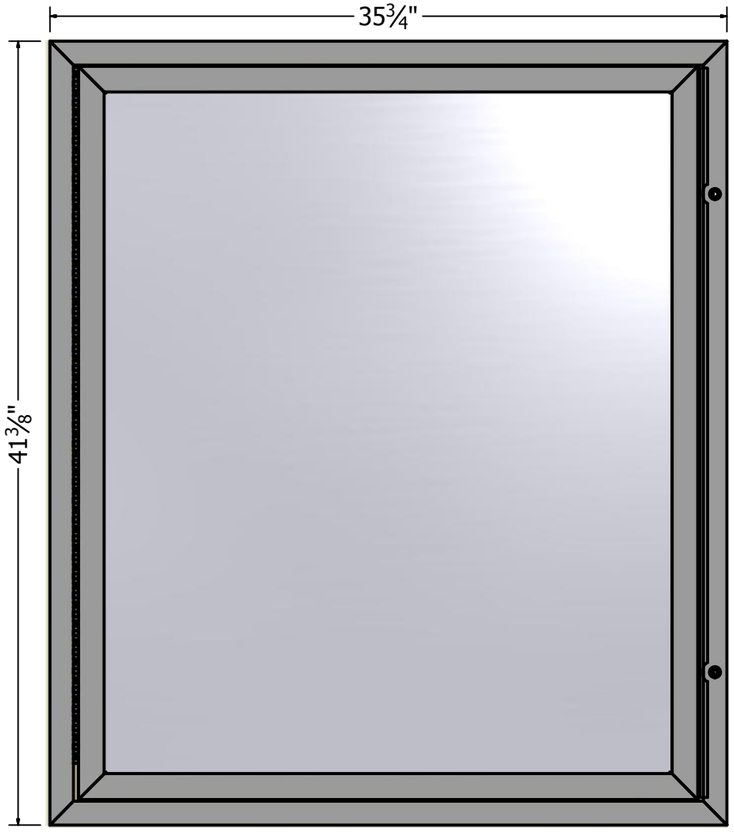

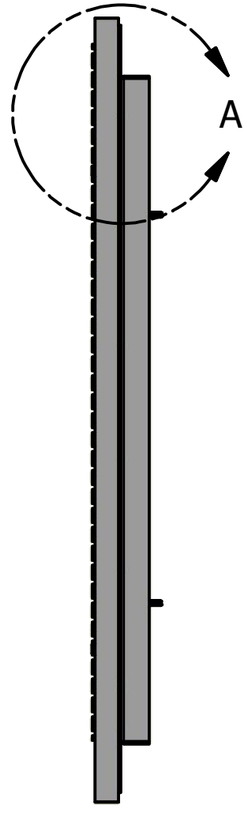

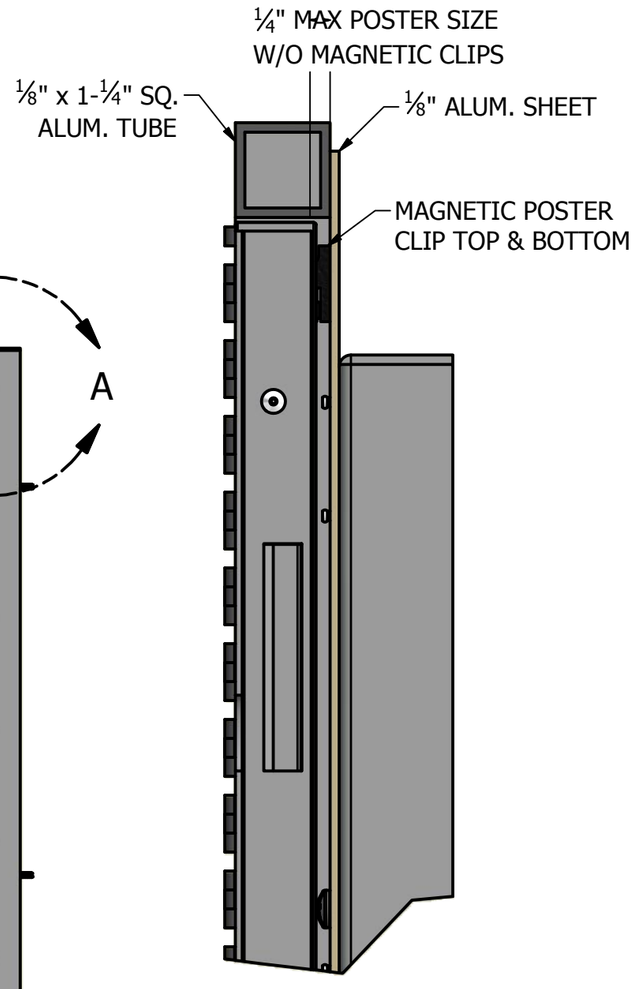

PARTS LIST			
ITEM	QTY	PART NUMBER	DESCRIPTION
1	1	30975-00	MAP CASE FRAME WELD.
11	1	30984-00	MAP CASE DOOR FRAME ASSY.
2	2	13616-00-36.75P	HINGE 36.75P, HIDDEN HINGE EXTRUSION
3	2	1014500-25	MAGNETIC POSTER CLIP
4	4	8155036	HEX NUT, 1/4-20 STN. STL.
5	4	8684053	1/4" FLAT WASHER STN. STL.
6	4	8703049	1/4" LOCK WASHER SS, SPRING LOCK
7	1	28637-00	MAP CASE BACK FRAME WELDMENT
8	20	8352031	POP RIVET 1/8" X .25 -.31, SSD45SSBS STN. STL.
9	4	8433225	MACHINE SCREW, 1/4"-20 X 2 1/4", PAN HD, PHILLIPS DRIVE, STAINLESS STEEL
10	2	1008601	MINITURE 3/8", CAM LOCK - CIRCULAR KEYWAY, KEYED ALIKE

TOLAR® DURABILITY WITH DISTINCTION

TOLAR MANUFACTURING COMPANY, INC
258 Mariah Circle, Corona CA. 92879

DESCRIPTION: MAP CASE

CUSTOMER/VENDOR: TURLOCK, CA

PG. 1 OF 2

SIZE: B | MATL. | DWG NO. 30973-00 | REV -

SCALE | DATE 10/23/2017 | DRAWN BY: Rfarr

T:\Inventor\Map Cases\30973-00.idw

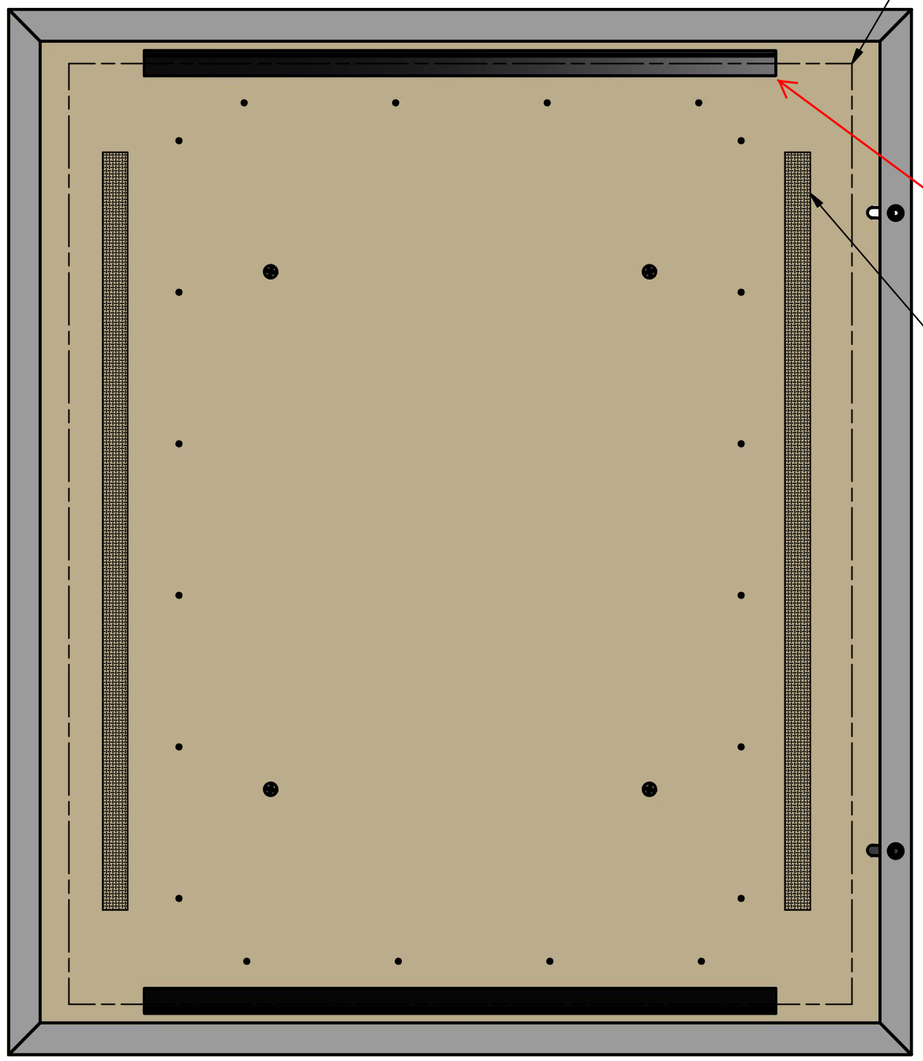

SHOWN W/O DOOR

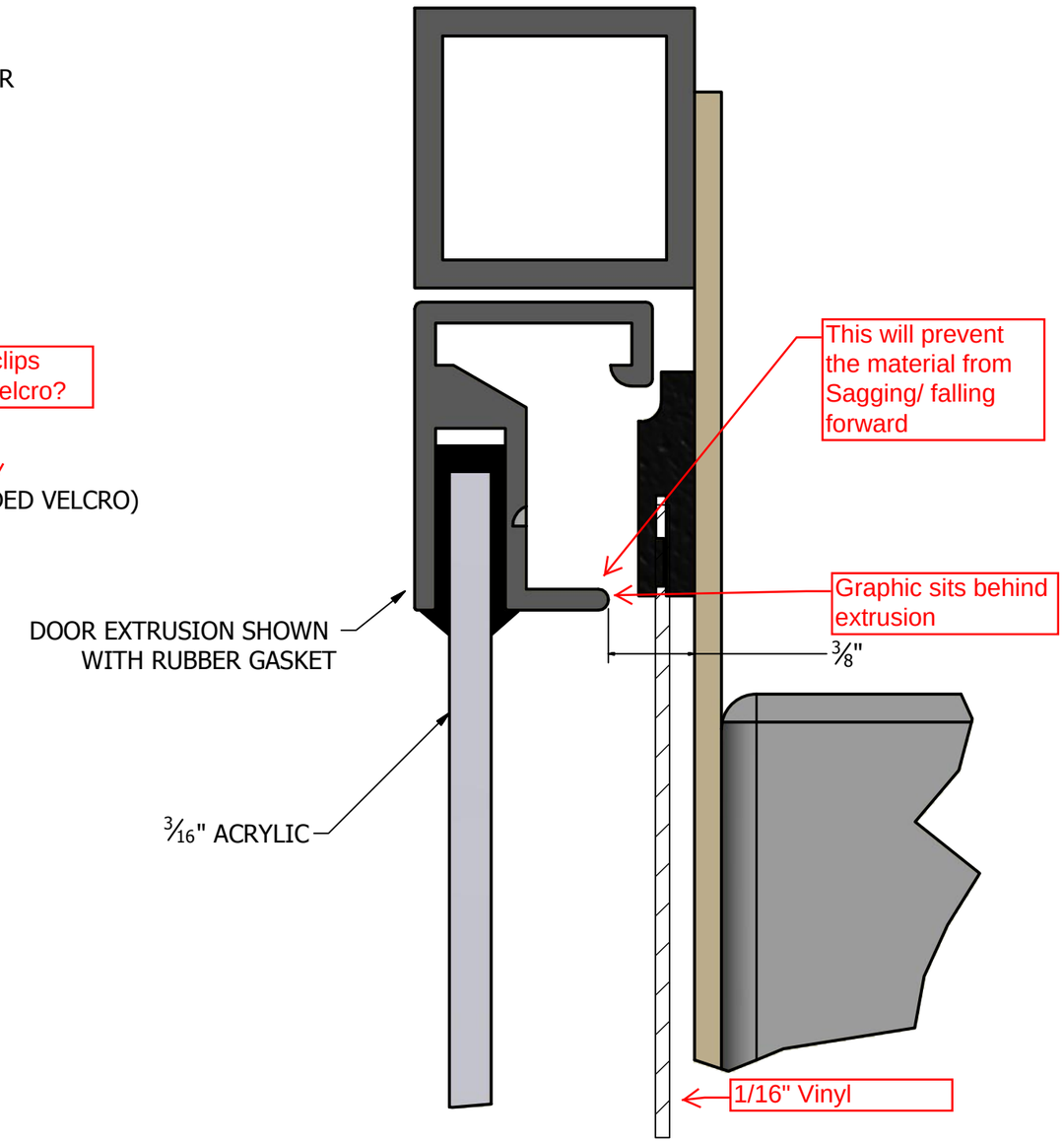

TOLAR MANUFACTURING COMPANY, INC 258 Mariah Circle, Corona CA. 92879			
DESCRIPTION MAP CASE			
CUSTOMER/VENDOR TURLOCK, CA			PG. 2 OF 2
SIZE B	MATL. VARIES	DWG NO. 30973-00	REV -
SCALE	DATE 10/23/2017	DRAWN BY: Rfarr	

T:\Inventor\Map Cases\30973-00.idw

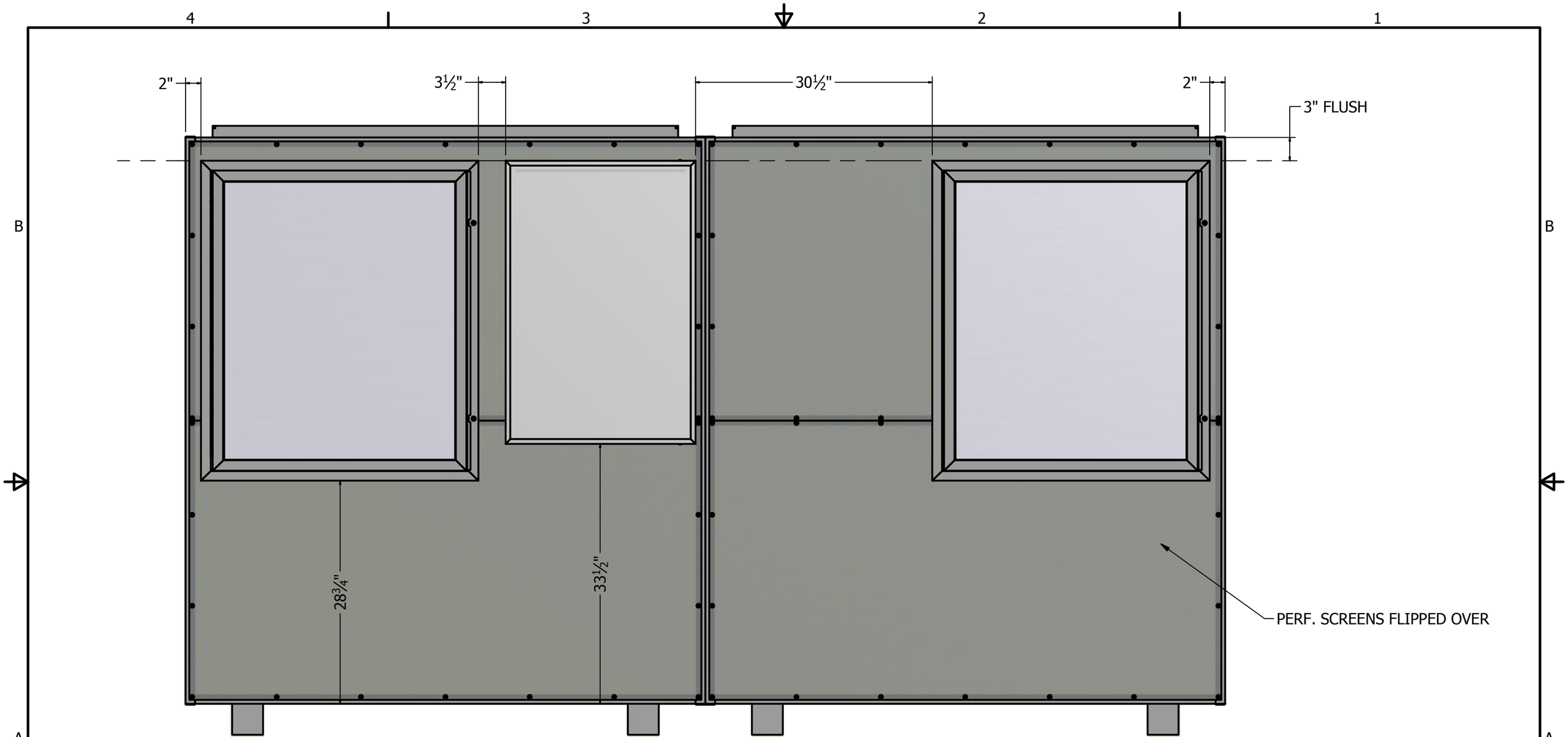

NOTES:
PERF SCREENS FLIPPED OVER
NO NOTCHES

TOLAR MANUFACTURING COMPANY, INC
258 Mariah Circle, Corona CA. 92879

DESCRIPTION			
CUSTOMER/VENDOR: TURLOCK, CA			PG.: 1 OF 1
SIZE: B	MATL.: VARIES	DWG NO.: 30951-01	REV: -
SCALE	DATE: 11/7/2017	DRAWN BY: Rfarr	

T:\Inventor\Map Cases\30951-01.idw